Purchasing Division
P.O. Box 2059
Prescott, AZ 86301

Phone: 928-777-1203
Fax: 928-777-1234
Tdd: 928-777-1100
dawn.foster@prescott-az.gov

January 12, 2011

ALL PROSPECTIVE BIDDERS

SUBJECT: ADDENDUM No. 1
BID Solicitation Number: 7205855-8910

Notice is hereby given that certain sections contained in the above referenced solicitation are being amended, clarified, and/or deleted and are identified as Addendum No. 1 and attached hereto.

THEREFORE: All bidders are required to indicate receipt of Addendum No. 1 via signed copy or acknowledgment of said document on bidder's letterhead submitted with bid.

Should you have any questions, please contact the Purchasing Manager, Dawn Foster, at 928-777-1203.

Sincerely,

Dawn M. Foster

Attachments

Addendum Number One (1): Electrical Installation Work – Standby Generator
Pre-Bid Meeting – Electrical Installation Work – Generator Meeting Notes for January 5, 2011
Pre-Bid Meeting for Standby Generator Electrical Installation Work – Guest Sign-In Sheet
Digital photos of main breaker bus bar connections
Sheet E-03: Main Switchboard MSDB
Automatic Transfer Switch Drawings – 8 Pages

Addendum Number One (1)
Electrical Installation Work – Standby Generator

January 12, 2011

SUBJECT: ADDENDUM No. 1
BID Solicitation Number: 7205855-8910

ALL PROSPECTIVE BIDDERS

A revised bid opening date has been set for Thursday, January 27, 2011 at 2:00 pm in City Council Chambers.

As notified previously by e-mail, an APS shutdown was done on Wednesday, January 12, 2011 at 9:30 am to access the inner switchboard panels and to allow for a physical inspection and pictures to be taken. Pictures are included in this addendum and will be e-mailed to each prospective bidder by COB Wednesday, January 12, 2011.

Drawing Number E-03 Main Switchboard MSDB has been revised to correct the wire routing error from the Automatic Transfer Switch to the Main Switchboard. Note One (1) and Note Six (6) on drawing E-03 were inapplicable for the project and were deleted from the sheet.

A hipot test is required prior restoring primary power from APS.

The Automatic Transfer Switch Drawings are included as requested at the pre-bid meeting.

Thank you for your interest in this project and we look forward to receiving your bid.

Sincerely,

Scott J Gregorio, Wastewater Superintendent

Public Works Department
Utilities Operations –Wastewater Treatment

1500 Sundog Ranch Road
Prescott, AZ 86301
(928) 777-1630

Pre-Bid Meeting - Electrical Installation Work – Generator
Meeting Notes for January 5, 2011

Presenter: Scott Gregorio, Wastewater Superintendent

City Staff: Paul Duke, Airport WRF Operations Supervisor
Al Fishback, Maintenance Specialist

Attendees:

Delta Diversified Enterprises	AJP Electric
Urban Energy Solutions	Jessco Electric
Alliance Service & Control Specialists	Summit Controls
Keller Electrical	Fann Environmental
Ludvik Electric	Arizona Electrical Services Plus

Q: Why would you want to install bus duct instead of conduit?

A: The City has allowed for a conduit and wire alternative. Include in bid all modifications included to run feeders in conduit including any necessary tap boxes, terminations, and duct bank. Feeder shall be rated at 3000 amps (minimum) at 75degrees C and underground duct bank shall be slurry encased PVC40 conduit with PVC coated rigid steel elbows. Note that all modifications to the existing switchgear bus are to be performed by the switchgear manufacturer. Also note that if the conduit and wire alternative is selected by the Contractor, the Contractor shall submit detailed drawings during the shop drawing review stage. Drawings shall be accepted by the Engineer and City prior to start of construction.

Q: Who will supply the auxiliary power supply during the shutdown?

A: The City will supply the auxiliary power and manpower for operation of critical equipment during the shutdown.

Q: How long can the power be shutdown?

A: The primary power supply can be shutdown for a maximum period of 48 hours. More than one shutdown is possible if 48 hours is not sufficient to perform the work. Plans should be made to shutdown the main power supply for the least amount of time possible.

Q: Who will coordinate with APS and have you contacted them yet?

A: The City will coordinate the initial shutdown with APS to gain access to the sub panels prior to the bid opening. It will be up to the bidder to coordinate the shutdown with the City and APS during the project. The engineer has contacted APS to advise them of the scope of work for the project.

Q: Will we be acting as the General Contractor or Sub-contractor for the project?

A: The bidder will act as the General Contractor for this project.

Q: Why wouldn't you want to bypass the main switchboard and run the APS primary power directly to the Automatic Transfer Switch?

A: Bypassing the main switchboard would require the addition of a new service. Pull feed to the transfer switch from the existing switchboard.

Q: Has Cutler-Hammer been contacted to look at the existing switchboard and see if it is feasible to install the bus bar for this application?

A: Cutler-Hammer has not performed a site inspection for installation of the bus bar on this project. The electrical engineer has been in contact with the switchgear manufacturer in regards to the existing bus modification and attachment of the new bus bar to the existing switchgear, which is noted on the drawings.

Q: Who will install the concrete pad for the Automatic Transfer Switch?

A: The City will install the concrete pad and set the transfer switch according to the contractors' schedule.

Q: Will the contractor be responsible for the structural work to install the overhead bus duct?

A: Yes, the contractor will be responsible for the work as specified in the bid documents.

Q: Has APS been contacted yet to get their view of what will be done?

A: APS has been contacted by the engineer to advise them of the scope of work.

Q: Did you plan on us installing an external switch box on the back side of the existing switchboard to shut down the primary power from APS and to use as a Tap Box?

A: No tap box is shown on the current plans, but if the Contractor decides to use a conduit and wire alternate, then the Contractor shall provide all necessary modifications including a tap box. Note that all modifications to the existing switchgear bussing shall be by the switchgear manufacturer. Include the cost of all required modifications associated with a conduit alternative in the Contractor's bid.

Q: Is it possible to schedule a shutdown with APS to remove internal panels on the main switchboard so that pictures can be taken or so it can be looked at physically prior to bidding?

A. The shutdown will be scheduled with APS by the City and all bidders will be contacted to inspect the inner switchgear connections if preferred. Pictures will also be taken and supplied to each bidder.

Q: Could we e-mail the cut sheet for the Automatic Transfer Switch?

A: The cut sheets will be supplied to each bidder.

Q: Is there a permit needed and who will be responsible for getting the permit?

A: A permit is required and shall be obtained by the contractor. The fee for the permit shall be included in the bidders bid.

Q: Will APS reconnect the primary power source without a green tag and who will be responsible for the inspection?

A. APS will require a green tag prior to reconnecting service. The City inspector will be responsible for the inspection.

Pre-Bid Meeting for Standby Generator Electrical Installation Work

Guest Sign-In Sheet

January 5, 2010

Name	Company	Address	Phone	Email
Tracy Sitze	Delta Diversified Enterprises	6724 Corsair Prescott, AZ 86301	Office: 928-708-0066 Cell: 928-308-5208	tracy@deltadiv.com
Eugene Vasquez	Borgan Electric, Inc.	943 Fair Street Prescott, AZ 86305	Office: 928-778-1529 Fax: 928-5642 Cell: 928-237-0743	mborgenelectric@gmail.com
Chuck Gierko for Chris Wallace - Project Manager	Alliance Service & Control	4846 S. 40th Street Phoenix, AZ 85040	Office: 602-431-4834 Ext. 110 Cell: 602-920-7089	cwallace@as-cs.com
Darcy Wekell Senior Account Mananger	Keller Electrical	1881 E. University Drive Phoenix, AZ 85034	Direct: 602-682-2134 Office: 602-437-3015 Cell: 602-757-4707	dwekell@kellerelectrical.com
Joseph Miller V.P. Phoenix Operations	Ludvik Electric	444 W. 21st Street, Suite 101 Tempe, AZ 85282	Direct: 480-809-3013 Main: 480-921-0809 Cell: 602-448-5955	jmiller@ludvik.com
Jeff Thompson Estimator/Project Manager	AJP Electric, Inc.	11250 N. Cave Creek Road Phoenix, AZ 85020	Office: 602-944-5477 Cell: 602-451-4841 Fax: 602-451-4841	jeff@ajpelectric.com
John P. Gannon Secretary/Treasurer	Jessco Electric, L.L.C.	P.O. Box 1793 Cave Creek, AZ 85327	Office: 480-488-0924 Cell: 602-708-4024 Fax: 480-488-3598	jgannon@jesscoelectric.com
Todd McKenzie	Summit Controls	2693 N. Industrial Drive Prescott Valley, 86314	928-772-2669	todd.mckenzie@summitcontrolsaz.com
Robert Upton	Fann Environmental	6708 Corsair Avenue, Suite A Prescott, AZ 86301	Office: 928-778-5335 Cell: 928-830-0509	rupton@fannenvironmental.com
Steve Myers	Arizona Electrical Services Plus	1890 W. Buena Vista Trail P.O. Box 10732 Prescott, AZ 86305	Office: 928-778-7467 Fax: 928-442-1217	steve@azelectrical.com

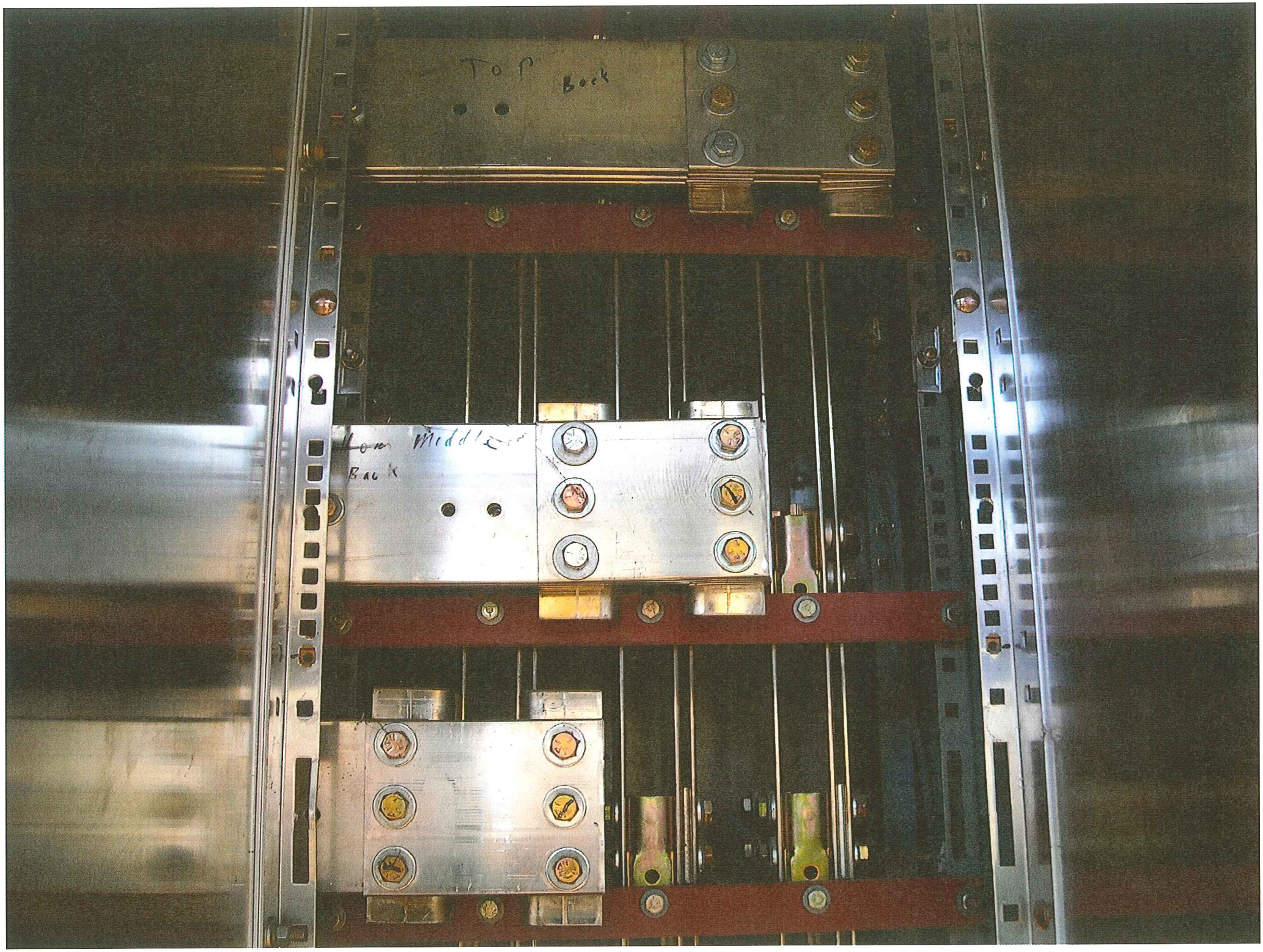
Top
Back
Low Middle
Back

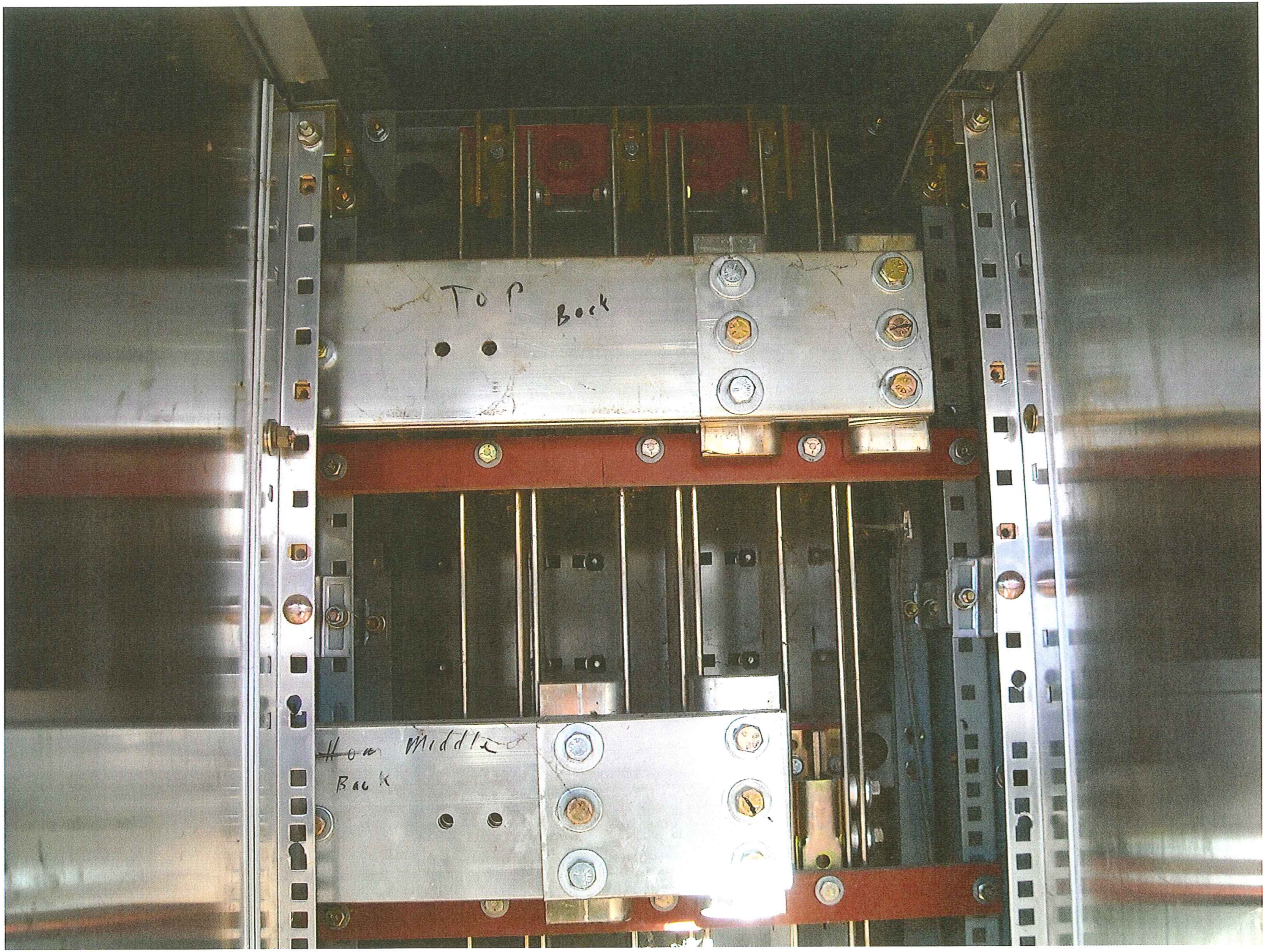
Top Back
Middle
Back

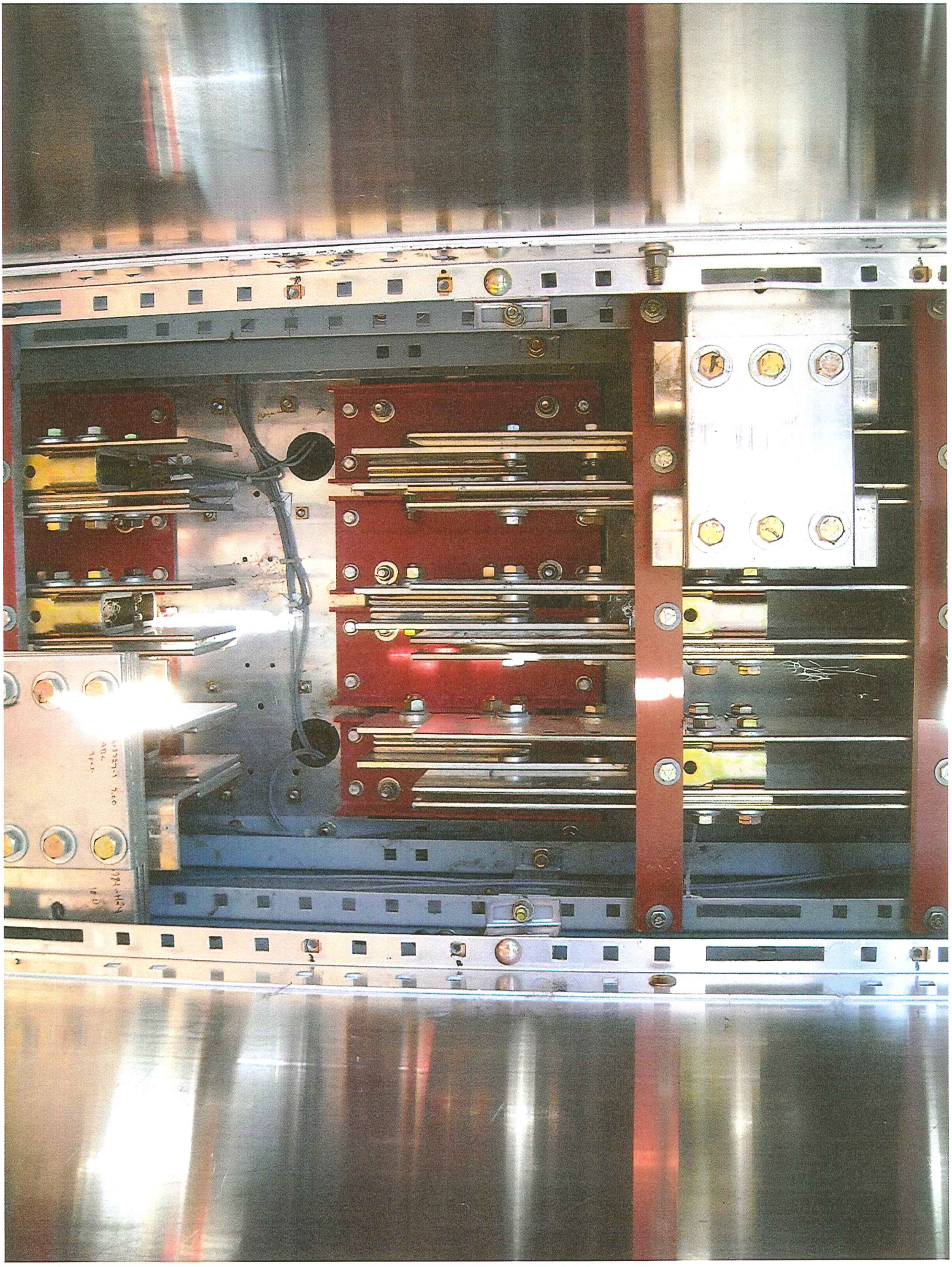

KEY NOTES:

2. EQUIPMENT PROVIDED BY OWNER
3. SWITCHED NEUTRAL
4. SWITCHED PHASE, TYP FOR 3 PHASES.
5. EXISTING WESTINGHOUSE POW-R-I SWITCHBOARD, 3000A, 1600A NEUTRAL, 65KAIC IN NEMA 3R WALK-IN ENCLOSURE.
7. NEUTRAL BUS
8. PHASE BUSSING

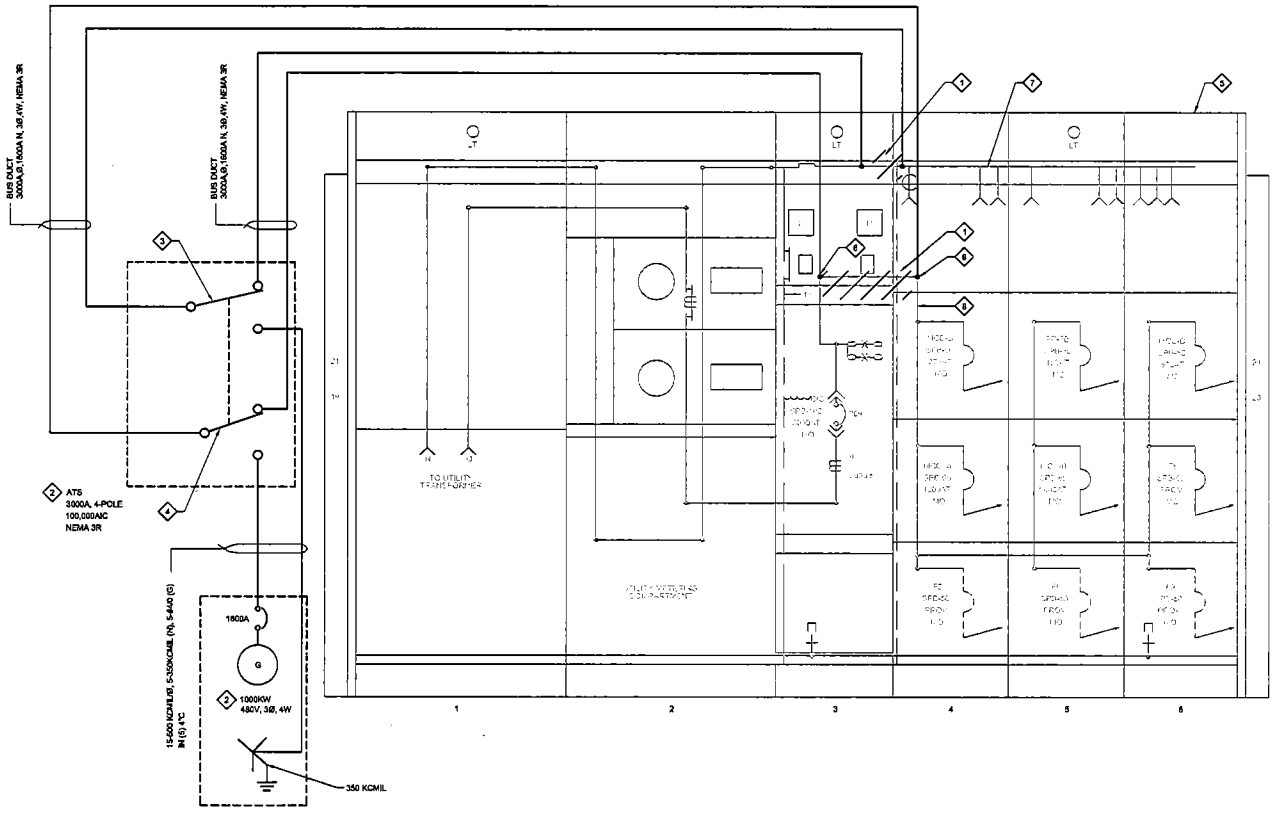

A MAIN SWITCHBOARD MSDB
SCALE: N.T.S
FILE: 8214A.10-E-03

LAST UPDATED: 10/22/2010 01:39 PM

LAST SAVED BY: obarranco

VERIFY SCALES
BAR IS ONE INCH ON ORIGINAL DRAWING
0 1"
IF NOT ONE INCH ON THIS SHEET, ADJUST SCALES ACCORDINGLY

REV	DATE	BY	DESCRIPTION

PROJECT NO: 8214A10 FILENAME: 8214_E-03.dwg

CERTIFICATE NO. 27404 CHARLES S. PACADUAN FIGURES 09-30-2011

FINAL-100%

carollo

KELLEY/WISE ENGINEERING

CITY OF PRESCOTT ARIZONA

PROJECT DESCRIPTION: CITY OF PRESCOTT, AZ
SUNDOG WWTP
STANDBY GENERATOR

ELECTRICAL

MAIN SWITCHBOARD MSDB

DESIGNED: CSP | DRAWN: DB | CHECKED: | DATE: OCTOBER 2010

CAROLLO ENGINEERS © COPYRIGHT 2010

JOB NO. 8214A10

DRAWING NO. E-03

SHEET NO. 3 of 5

SEISMIC OUTLINE FOR ASCO® 4000 & 7000 SERIES 2600-3000 AMPERE "G" FRAME (ATS,ACTS,ADTS) REAR CONNECTED TRANSFER SWITCHES TYPE 3R SECURE ENCLOSURE

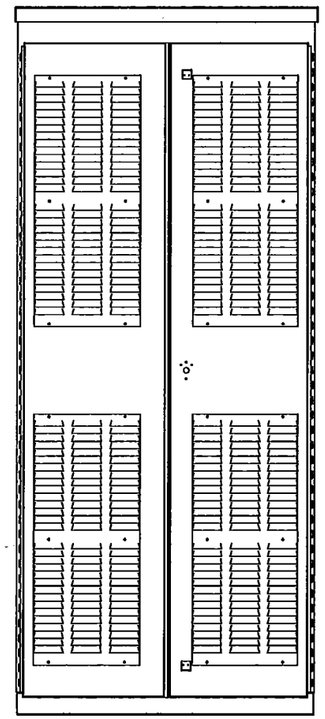

'FRONT VIEW WITH N3R-SKINS'

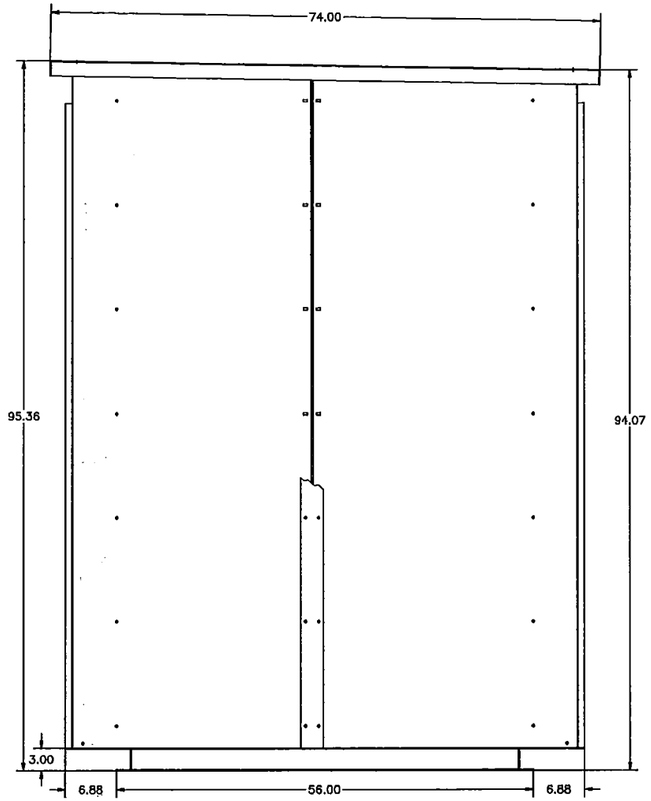

'RIGHT SIDE VIEW WITH N3R-SKINS'

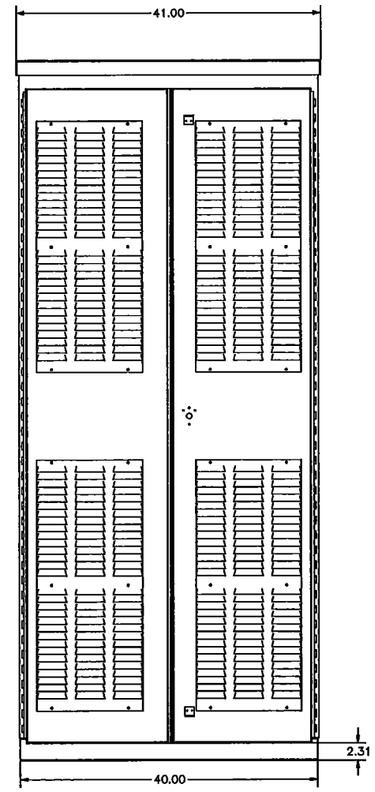

'REAR VIEW WITH N3R-SKINS'

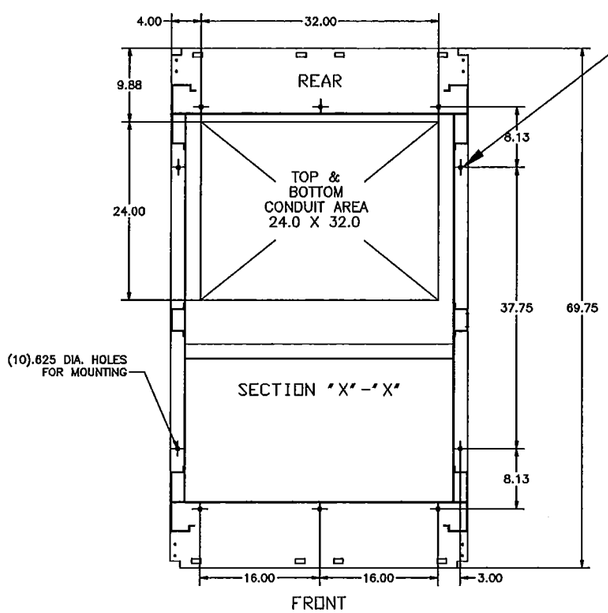

ø.625 MOUNTING HOLES (10) PLC'S. BOLT THROUGH DIMENSION OF ½" MOUNTING HARDWARE MUST BE GRADE 5 WITH ½" BASE MOUNTING PLATE SIMILAR TO "POWER-STRUT P/N PS619.

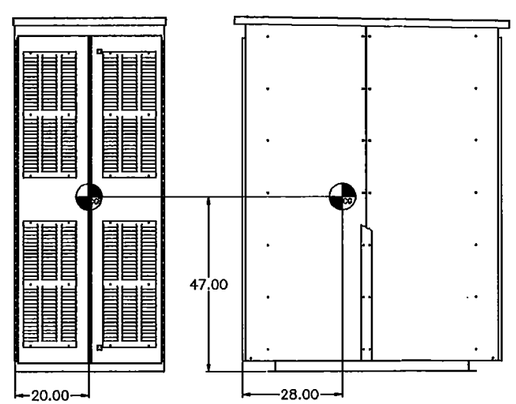

'FRONT VIEW' 'RIGHT SIDE VIEW'

GENERAL NOTES

1. TYPE 3R RAINPROOF ENCLOSURE. FREE STANDING. FLOOR MOUNTED. CODE GAUGE FORMED FRAME CONSTRUCTION.
2. NEC STANDARD GAUGE PAN TYPE DOOR WITH LOCKABLE HANDLE.
3. FINISH: ANSI 61 GRAY, POLYESTER POWDER STANDARD. OTHER ANSI COLORS AVAILABLE CONSULT FACTORY UL RECOGNIZED.
4. CONSTRUCTION IS IN ACCORDANCE WITH APPLICABLE REQUIREMENTS OF UL 891.
5. RECOMMENDED CLEARANCES:
   FRONT: 36 INCHES
   REAR: 30 INCHES
6. A 20% RATED GROUND BUS IS PROVIDED AT THE REAR OF THE ENCLOSURE.
7. UNIT IS DESIGNED FOR BOTTOM CABLE ENTRY ONLY. THE STANDARD SWITCH CONFIGURATION IS FOR TOP LUGS EMERGENCY CENTER LUGS LOAD AND BOTTOM LUGS NORMAL. OPTIONALLY, THE SWITCH MAY BE SUPPLIED WITH REVERSE NORMAL & EMERGENCY. (REFER TO THE WIRING DIAGRAM FURNISHED WITH EACH TRANSFER SWITCH TO DETERMINE TERMINATION POSITIONS).
8. NEUTRAL CONFIGURATIONS:
   AN OPTIONAL FULL RATED NEUTRAL CONFIGURATION FOR EACH SOURCE AND THE LOAD MAY BE PROVIDED. WHEN EQUIPPED IT IS IN ONE OF THE FOLLOWING FORMATS AS SPECIFIED BY THE CATALOG NUMBER NO. NEUTRAL TYPE:
   (A) SOLID (COPPER BUS) NEUTRAL
   (B) SWTICHED NEUTRAL POLE
   (C) OVERLAPPING NEUTRAL POLE (NOT AVAILABLE ON ACTS/ADTS UNITS)
9. CENTER OF GRAVITY
10. NO KNOCKOUTS ARE PROVIDED.

SERIES	CATALOG PREFIX
4000	4ATS
	4NTS
	4ACTS
	4NCTS
	4ADTS
	4NDTS
7000	7ATS
	7NTS
	7ACTS
	7NCTS
	7ADTS
	7NDTS

CABLING NOTES

1. ALL SIZES SUPPLIED STANDARD WITH MECHANICAL (SCREW TYPE) LUGS. (SEE AMP SIZE BELOW)
   A. LUG MATERIAL: ALUMINUM ALLOY 6061-T6 WITH ELECTRO TIN PLATED FINISH.
   B. SCREW MATERIAL: ALUMINUM ALLOY 6262-T9 WITH ELECTRO TIN PLATED FINISH.
   C. UL LISTED, CSA CERTIFIED.
   D. LUG SCREW TIGHTENING TORQUE PER UL 486B: 19 FT-LBS.
   E. SUITABLE WIRE BENDING SPACE IS PROVIDED. (SEE AMP SIZE BELOW)
2. OPTIONAL COPPER CRIMP LUGS MAY BE SUPPLIED. (SEE AMP SIZE BELOW)
   A. LUG MATERIAL: HIGH CONDUCTIVITY WROUGHT COPPER FINISH, ELECTRO TIN PLATED.
   B. UL LISTED, CSA CERTIFIED.
   C. LUG MOUNTING HARDWARE TIGHTENING TORQUE: (REFER TO WITHSTAND CURRENT RATING LABEL PROVIDED ON EACH TRANSFER SWITCH).
   D. SUITABLE WIRE BENDING SPACE IS PROVIDED. (SEE AMP SIZE BELOW)
3. CONSULT FACTORY FOR OTHER TERMINATION REQUIREMENTS.
4. GROUND LUGS ARE PROVIDED STANDARD AS FOLLOWS. (SEE AMP SIZE BELOW).
5. CUSTOMER TERMINAL BLOCKS:
   FOR ALL 7000 SERIES UNITS THE TB WILL BE MOUNTED ON THE UPPER RIGHT INSIDE OF ENCLOSURE.
   FOR 4000 SERIES UNITS TB WILL BE MOUNTED ON THE TRANSFER SWITCH FRAME AS INDICATED.

NOTES 2600-3000 AMPS

1. SUPPLIED WITH STANDARD MECHANICAL (SCREW TYPE) LUGS ON THE NORMAL, EMERGENCY & LOAD BUS STABS. TWO (2) LUG PER PHASE AND NEUTRAL EACH SUITABLE FOR CONNECTION OF TWELVE (12) 1/0 -750MCM CU/AL CABLE (SEE NOTE "E" BELOW).
   A. SUITABLE WIRE BENDING SPACE IS PROVIDED FOR UP TO TWELVE (12) 750MCM CABLES PER TERMINAL PER TABLE 373-6(a) OF NFPA 70 OF THE NEC.
2. OPTIONAL COPPER CRIMP LUGS MAY BE SUPPLIED. UP TO EIGHT (8) TWO HOLE, LONG BARREL CU CRIMP LUGS RATED FOR UP TO 600MCM. (REFER TO CRIMP LUG INSTALLATION DATA PROVIDED WITH UNIT FOR FULL INSTALLATION DETAILS).
   A. SUITABLE WIRE BENDING SPACE IS PROVIDED FOR UP TO EIGHT (8) 600MCM CABLES PER TERMINAL PER TABLE 373-6(b) OF NFPA 70 OF THE NEC.
3. GROUND LUGS ARE PROVIDED STANDARD AS FOLLOWS;
   (36) 1/0 - 750MCM CU/AL CABLE

AMP SIZE	POLES	WEIGHTS LB (KG)
2600 TO 3000	2	2000 (908)
	B2	2150 (976)
	C2	2150 (976)
	3	2150 (976)
	B3	2230 (1012)
	C3	2230 (1012)

ACC. 125:
BASED ON ICC-ES AC-156 TESTING PROCEDURES ASCO POWER TECHNOLOGIES, LP, CERTIFIES THAT THIS TRANSFER SWITCH MEETS OR EXCEEDS THE REQUIREMENTS OF 2006 INTERNATIONAL BUILDING CODE AND 2007 CALIFORNIA BUILDING CODE FOR IMPORTANCE FACTOR 1.5, ELECTRICAL EQUIPMENT FOR 300% g Ss ROOF TOP APPLICATIONS OR LESS SEVERE SEISMIC REGIONS WHEN MOUNTED AS INDICATED ON THE SUPPLIED DRAWINGS. SUITABLE FOR BUILDING CATEGORIES I, II, III OR IV; USE GROUPS I, II OR III; DESIGN CATEGORIES A, B, C AND D; AND SITE CLASSES A, B, C OR D.

REV. TO SHEET	ECN NO.	BY	APP.	DATE
—	226391 ISSUED	KK	BK	03/23/10

PROJECT NAME:

MOUNTING | OUTLINE

4000/7000 SERIES, TYPE 3R SECURE "SEISMIC"
ATS/ACTS/ADTS 2600-3000 AMP

THIRD ANGLE PROJECTION

	BY	DATE
DRAWN BY	KK	03/23/10
CHECKED	BK	03/23/10
PROJECT APPROVAL	BK	03/23/10
FINAL APPROVAL		

MANUFACTURING TOLERANCES TO BE IN ACCORDANCE WITH ASCO PROCEDURE MP-1-003. FOR PLASTIC PARTS SEE MP-1-005

ASSEM. REF. NO.

PROPERTY OF ASCO POWER TECHNOLOGIES. USE PERMITTED FOR OUR WORK ONLY. ALL RIGHTS OF DESIGN OR INVENTION ARE RESERVED.

ASCO® ASCO POWER TECHNOLOGIES, LP. FLORHAM PARK, NEW JERSEY 07932 U.S.A.

COMPUTER GENERATED DRAWING

SCALE 1:1 SIZE DS

DWG. NO. 725400-013

DRAWING — REV. ECN NO. 226391 SHEET 1 OF 2

SEISMIC OUTLINE FOR ASCO® 4000 & 7000 SERIES 2600-3000 AMPERE "G" FRAME (ATS,ACTS,ADTS) REAR CONNECTED TRANSFER SWITCHES TYPE 3R SECURE ENCLOSURE

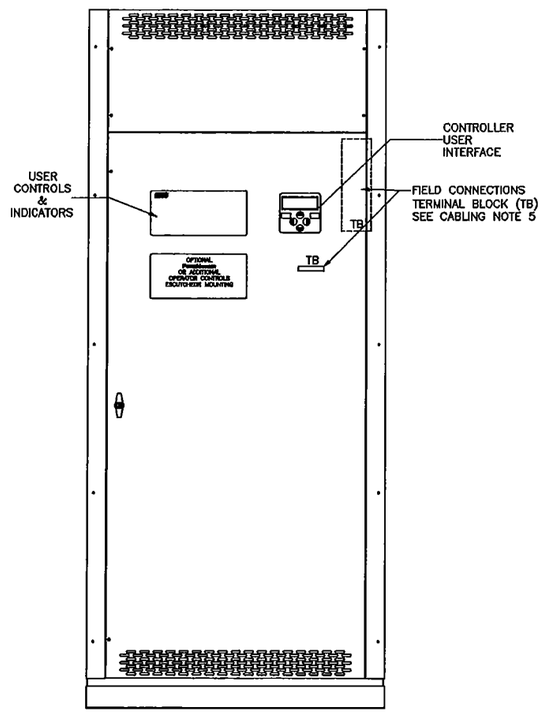

"FRONT VIEW WITH COVERS"

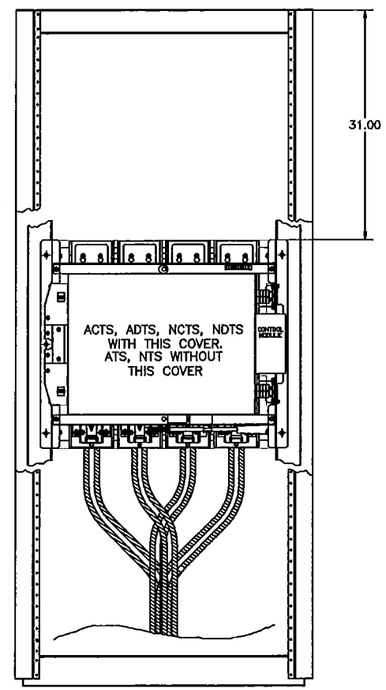

"FRONT VIEW W/O COVERS"

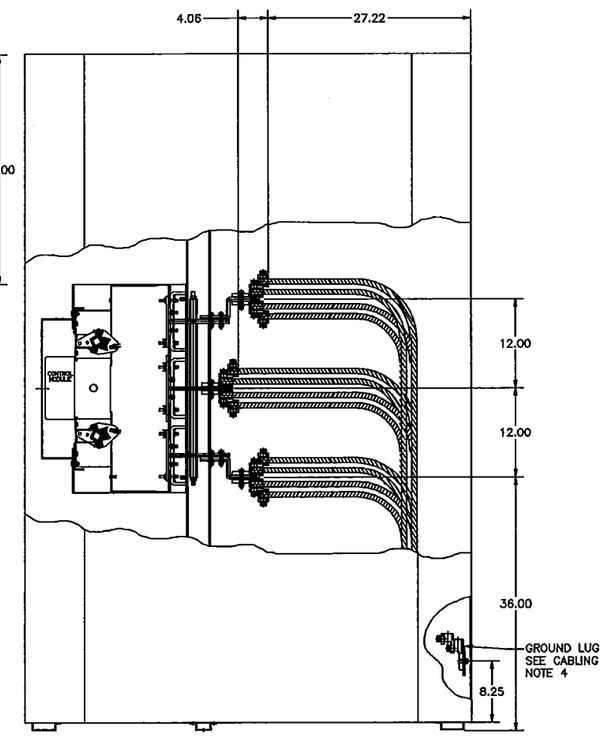

"RIGHT SIDE VIEW W/O N3R-SKINS"

REV. TO SHEET	ECN NO.	BY	APP.	DATE
—	226391 ISSUED	KK	BK	03/23/10

PROJECT NAME:

MOUNTING OUTLINE

4000/7000 SERIES, TYPE 3R SECURE "SEISMIC"
ATS/ACTS/ADTS 2600-3000 AMP

THIRD ANGLE PROJECTION

	BY	DATE
DRAWN BY	KK	03/23/10
CHECKED	BK	03/23/10
PROJECT APPROVAL	BK	03/23/10
FINAL APPROVAL		

MANUFACTURING TOLERANCES TO BE IN ACCORDANCE WITH ASCO PROCEDURE MP-1-003. FOR PLASTIC PARTS SEE MP-1-005

ASSEM. REF. NO.

PROPERTY OF ASCO POWER TECHNOLOGIES. USE PERMITTED FOR OUR WORK ONLY. ALL RIGHTS OF DESIGN OR INVENTION ARE RESERVED.

ASCO® ASCO POWER TECHNOLOGIES, L.P. FLORHAM PARK, NEW JERSEY 07932 U.S.A.

COMPUTER GENERATED DRAWING

SCALE 1:1 SIZE DS

DWG. NO. 725400-013

DRAWING REV. – ECN NO. 226391 SHEET 2 OF 2

THREE PHASE WIRING FOR ASCO® 7000 SERIES AUTOMATIC CLOSED TRANSITION TRANSFER SWITCHES TYPE 7ACTS RATED 1000–3200 AMPERES

FEATURES, SETTINGS, OPERATION, ACCESSORIES & NOTES

THE FOLLOWING FEATURES AND RELATED SETTINGS ARE PART OF THE GROUP 5 CONTROL PANEL'S USER CONFIGURABLE PARAMETERS. FOR DETAILED INFORMATION REGARDING THE CONFIGURATION OF THESE PARAMETERS AND OTHER FEATURES OF THE GROUP 5 CONTROL PANEL, REFER TO THE GROUP 5 CONTROL PANEL FOR ASCO® 7000 SERIES AUTOMATIC TRANSFER SWITCHES USER'S GUIDE (PART NO. 381333–126) PROVIDED WITH EVERY 7000 SERIES AUTOMATIC TRANSFER SWITCH.

THE NOMINAL OPERATING VOLTAGE & FREQUENCY IS PRE–PROGRAMMED AT THE FACTORY BASED ON THE NAMEPLATE DATA PRINTED ON THE TRANSFER SWITCH & CONTROL PANEL NAMEPLATES.

VOLTAGE & FREQUENCY SENSING

THE FOLLOWING SETTINGS ARE EXPRESSED AS A PERCENTAGE OF THE CONTROL PANEL'S NOMINAL VOLTAGE SETTING UNLESS STATED OTHERWISE. ALL SETTINGS ARE ADJUSTABLE IN INCREMENTS OF 1%.

A. RMS VOLTAGE SENSING ON ALL PHASES OF THE NORMAL & EMERGENCY SOURCES.

PARAMETER	RANGE OF SETTINGS	DEFAULT SETTING
NORMAL VOLTAGE DROPOUT	70–98%	85%
NORMAL VOLTAGE PICKUP	85–100%	90%
NORMAL OVER VOLTAGE TRIP	102–115%	OFF
NORMAL VOLTAGE UNBALANCE	YES/NO	NO
NORMAL VOLTAGE UNBALANCE DROPOUT	5–20% OF AVG. NORMAL VOLTAGE	20% (if ON)
NORMAL VOLTAGE UNBALANCE PICKUP	3–18% OF AVG. NORMAL VOLTAGE	10% (if ON)
EMERGENCY VOLTAGE DROPOUT	70–98%	75%
EMERGENCY VOLTAGE PICKUP	85–100%	90%
EMERGENCY OVER VOLTAGE TRIP	102–115%	OFF
EMERGENCY VOLTAGE UNBALANCE	YES/NO	NO
EMERGENCY VOLTAGE UNBALANCE DROPOUT	5–20% OF AVG. EMERGENCY VOLTAGE	20% (if ON)
EMERGENCY VOLTAGE UNBALANCE PICKUP	3–18% OF AVG. EMERGENCY VOLTAGE	10% (if ON)

B. FREQUENCY SENSING OF THE NORMAL & EMERGENCY SOURCES.

PARAMETER	RANGE OF SETTINGS	DEFAULT SETTING
NORMAL FREQUENCY DROPOUT	85–98%	90%
NORMAL FREQUENCY PICKUP	90–100%	95%
NORMAL OVER FREQUENCY TRIP	102–110%	OFF
EMERGENCY FREQUENCY DROPOUT	85–98%	90%
EMERGENCY FREQUENCY PICKUP	90–100%	95%
EMERGENCY OVER FREQUENCY TRIP	102–110%	OFF

TIME DELAYS

THE FOLLOWING TIME DELAY SETTINGS ALL HAVE AN ADJUSTABLE RANGE OF 0–60 min 59 sec UNLESS STATED OTHERWISE. ADJUSTABLE IN INCREMENTS OF 1 sec.
NOTE: SOME TIME DELAYS MAY BE EFFECTED BY CUSTOMER REQUESTED ACCESSORIES PROVIDED WITH THE UNIT. REFER TO THE DESCRIPTIONS PROVIDED UNDER THE "ACCESSORIES" NOTES ON THIS PAGE.

FEATURE	NAME	DEFAULT SETTING
1C	NORMAL SOURCE FAILURE TO ENGINE START	1 sec
2B	TRANSFER TO EMERGENCY ON AVAILABILITY OF EMERGENCY SOURCE	0 sec
1F	EMERGENCY SOURCE FAILURE RETRANSFER (NORMAL SOURCE AVAILABLE)	0 sec
2E	ENGINE COOLDOWN FOLLOWING RETRANSFER TO NORMAL	5 min
3A	RETRANSFER TO NORMAL (NORMAL FAILURE MODE)	30 min
3A	RETRANSFER TO NORMAL (TEST MODE)	30 sec
–	DELAYED TRANSFER (LOAD "OFF" TIME), [0–5 min 59 sec]	3 sec

DESCRIPTIONS OF TIME DELAYS:

FEAT. 1C – DELAY ON NORMAL SOURCE OUTAGE. STARTS ON FAILURE OF NORMAL SOURCE. RESETS IF NORMAL SOURCE IS ACCEPTED BEFORE EXPIRATION. INHIBITS ENGINE STARTING AND AUTOMATIC TRANSFER UNTIL EXPIRATION.

FEAT. 2B – DELAY PRIOR TO TRANSFER TO THE EMERGENCY SOURCE. DELAY STARTS ON EXPIRATION OF FEAT. 1C AND WHEN THE EMERGENCY SOURCE HAS BEEN ACCEPTED. DELAY RESETS IF THE EMERGENCY SOURCE FAILS PRIOR TO EXPIRATION. ON EXPIRATION, TRANSFER TO EMERGENCY IS INITIATED UNLESS THE NORMAL SOURCE HAS RECOVERED AND THE "COMMIT TO TRANSFER" FEATURE IS SET TO "NO" COMMIT. PROVIDES A PERIOD FOR EMERGENCY SOURCE STABILIZATION OR STAGING OF MULTIPLE TRANSFER SWITCH CONTROLLED LOADS TO THE EMERGENCY SOURCE.

FEAT. 1F – DELAY ON RETRANSFER TO NORMAL IN THE EVENT OF EMERGENCY SOURCE FAILURE. DELAY BEGINS ON FAILURE OF THE EMERGENCY SOURCE IF THE NORMAL SOURCE IS ACCEPTABLE. ON EXPIRATION, RETRANSFER TO NORMAL WILL BE INITIATED.

FEAT. 2E – DELAY ON ENGINE SHUTDOWN (ENGINE COOL DOWN PERIOD). DELAY STARTS FOLLOWING RETRANSFER TO THE NORMAL SOURCE. PROVIDES A PERIOD FOR THE ENGINE–GENERATOR SET TO RUN UNLOADED PRIOR TO SHUTDOWN.

FEAT. 3A – RETRANSFER TO NORMAL DELAY (NORMAL FAILURE MODE)
DELAY STARTS WHEN NORMAL SOURCE IS ACCEPTED (FOLLOWING IT'S FAILURE) AND WHILE THE LOAD IS CONNECTED TO EMERGENCY. RESETS IF NORMAL FAILS PRIOR TO EXPIRATION OR IF THE EMERGENCY SOURCE FAILS BEFORE EXPIRATION AND FEAT. 1F EXPIRES (AUTOMATIC BYPASS ON EMERGENCY SOURCE FAILURE). PROVIDES A PERIOD FOR THE NORMAL SOURCE TO STABILIZE PRIOR TO RETRANSFER.

FEAT. 3A – RETRANSFER TO NORMAL DELAY (TEST MODE)
DELAY STARTS WHEN THE "TRANSFER TEST" SWITCH IS RESET TO "AUTO" (FOLLOWING A USER INITIATED TRANSFER TEST) AND WHILE THE LOAD IS CONNECTED TO EMERGENCY. RESETS IF NORMAL FAILS PRIOR TO EXPIRATION OR IF THE EMERGENCY SOURCE FAILS BEFORE EXPIRATION AND FEAT. 1F EXPIRES (AUTOMATIC BYPASS ON EMERGENCY SOURCE FAILURE).

IN SYNC – IN SYNC TIME DELAY BEGINS BEFORE A CLOSED TRANSITION TRANSFER FOLLOWING ACCEPTANCE OF THE SOURCE TO WHICH TRANSFER IS BEING MADE. ON EXPIRATION OF THE DELAY, THE LOGIC AWAITS AN IN SYNC CONDITION FOR SUBSEQUENT CLOSED TRANSITION TRANSFER.

EXTENDED PARALLEL – EXTENDED PARALLEL TIMER BEGINS WHEN THE SOURCES ARE PARALLELED (CN & CE CLOSED). IF THE TWO SOURCES REMAIN IN PARALLEL WHEN THE DELAY EXPIRES, THE CONTROL LOGIC TAKES THE FOLLOWING ACTIONS:

- THE LOGIC WILL ATTEMPT TO OPERATE THE TRANSFER SWITCH TO A "SAFE" STATE WHERE THE SOURCES WILL NO LONGER BE PARALLELED AND THE LOAD WILL BE SERVICED BY AN AVAILABLE SOURCE.
- THE CONTROL PANEL IS LOCKED OUT FROM ANY FURTHER AUTOMATIC OPERATION.
- THE "TS LOCKED OUT" INDICATOR (RED LED) IS LIT.
- THE EXTENDED PARALLEL ALARM TIMER LOCATED ON THE DUAL OPERATOR CONTROL (DOC) IS ENABLED.
- THE UNIT WILL REMAIN LOCKED OUT UNTIL THE "TS LOCKED OUT" PUSH–BUTTON IS DEPRESSED FOR RESET.

FAIL TO SYNC – FAILURE TO SYNC TIMER BEGINS WHEN THE LOGIC BEGINS TO CHECK FOR AN IN SYNC CONDITION FOR WHICH TO ALLOW CLOSED TRANSITION TRANSFER. IF THE DELAY EXPIRES PRIOR TO AN IN SYNC CONDITION OCCURRING, THE "FAILURE TO SYNCHRONIZE" SIGNAL IS ACTIVATED (RED LED) AND CLOSURE OF THE TFR RELAY CONTACT AVAILABLE AT THE FIELD CONNECTIONS TERMINAL BLOCK (TB).

FEAT. 62F – EXTENDED PARALLEL ALARM TIMER BEGINS TIMING WHEN ENABLED FOLLOWING EXPIRATION OF THE EXTENDED PARALLEL TIMER OF THE CONTROL PANEL. THE ENABLING OF THE EXTENDED PARALLEL ALARM TIMER INDICATES THAT THE UNIT HAS ATTEMPTED TO RECOVER TO A "SAFE STATE" AND THAT IT HAS BEEN LOCKED OUT. ON EXPIRATION OF THE DELAY, OUTPUT RELAY (RL3) (2) FORM C CONTACTS, CONNECTED TO THE FIELD CONNECTIONS TERMINAL BLOCK (TB0, TRANSFER. THE DELAY IS ADJUSTABLE VIA A POTENTIOMETER (P2) LOCATED ON THE DUAL OPERATOR CONTROL (DOC) WHICH IS ADJUSTABLE FROM 0–1 SECOND. FACTORY SET AT 1 SEC.

ENGINE EXERCISER

THE ENGINE EXERCISER FEATURE PROVIDES A MEANS TO PERFORM AUTOMATIC EXERCISING OF THE ENGINE–GENERATOR SET EITHER WITH OR WITHOUT LOAD TRANSFER.
THE USER CAN PROGRAM UP TO SEVEN DIFFERENT EXERCISE ROUTINES. EACH ROUTINE INCLUDES;

1. ENABLE OR DISABLE THE ROUTINE
2. ENABLE OR DISABLE TRANSFER OF THE LOAD DURING THE ROUTINE
3. SET START TIME OF ROUTINE –
   - TIME OF DAY
   - DAY OF WEEK
   - WEEK OF MONTH (1st, 2nd, 3rd, 4th, ALTERNATE OR ALL)
4. SET THE DURATION OF THE ROUTINE

PARAMETER	RANGE OF SETTING	DEFAULT SETTING
MONTH (CLOCK SET)	JAN FEB MAR APR MAY JUN JUL AUG SEP OCT NOV DEC	CURRENT DATE
DAY	1–31	
YEAR	00–99	
HOUR	0–23	Eastern Standard Time
MINUTE	0–59	
ENABLE ROUTINE (ROUTINE 1–7)	YES/NO	NO
TRANSFER LOAD	YES/NO	NO
START HOUR	0–23	0
START MINUTE	0–59	0
RUN WEEK	ALL, ALTERNATE, 1st, 2nd, 3rd, 4th, 5th	ALL
RUN DAY	SUN MON TUE WED THU FRI SAT	SUN
DURATION HOURS	0–23	0
DURATION MINUTES	0–59	0

OPERATION

IF THE NORMAL SOURCE FAILS, THE TRANSFER SWITCH INITIATES STARTING OF THE ENGINE–GENERATOR SET. WHEN PROPER VOLTAGE AND FREQUENCY HAVE BEEN ATTAINED, THE LOAD WILL BE TRANSFERRED IN AN OPEN TRANSITION (BREAK BEFORE MAKE) OPERATION TO THE EMERGENCY SOURCE.

WHEN THE NORMAL SOURCE IS RESTORED FOR THE DURATION OF THE FEATURE 3A, RETRANSFER TO NORMAL TIME DELAY SETTING, THE CONTROLS WILL BEGIN MONITORING PHASE, FREQUENCY, AND VOLTAGE DIFFERENTIAL BETWEEN NORMAL AND EMERGENCY SOURCES.

WHEN THE TWO SOURCES ARE APPROACHING SYNCHRONISM, A CLOSED TRANSITION (MAKE BEFORE BREAK) TRANSFER TO THE NORMAL SOURCE WILL BE INITIATED. THE NORMAL AND EMERGENCY CONTACTORS (CN & CE) WILL BE IN AN OVERLAP CONDITION FOR LESS THAN 0.1 SECONDS.

CLOSED TRANSITION TRANSFER WILL ALSO BE INITIATED DURING A TRANSFER TEST OPERATION CAUSED BY OPERATION OF THE FEATURE 5 TRANSFER TEST SELECTOR SWITCH. RETRANSFER WILL ALSO OCCUR IN A CLOSED TRANSITION MANNER AT THE END OF THE TEST.

CLOSED TRANSITION BYPASS OPERATION: THE "CT BYPASS OPTIONS" DISPLAY OF THE CONTROL PANEL ALLOWS SETTING THE TRANSFER SWITCH'S CLOSED TRANSITION BYPASS BEHAVIOR. CLOSED TRANSITION BYPASS CAUSES THE TRANSFER SWITCH TO INTERRUPT POWER TO THE LOAD DURING TRANSFER. THE AVAILABLE OPTIONS ARE:

- FAIL TO SYNC AUTO BYPASS ENABLE – CAUSES A "FAILURE TO SYNCHRONIZE" CONDITION TO RESULT IN AN AUTOMATIC CLOSED TRANSITION BYPASS. DEFAULT SETTING IS NO AUTOMATIC BYPASS.
- CT BYPASS – ALLOWS SELECTIONS AS TO WHETHER THE CLOSED TRANSITION BYPASS WILL OCCUR WITH OR WITHOUT A DELAYED TRANSITION (LOAD "OFF" TIME). DEFAULT SETTING IS OPEN TRANSITION (NO DELAY).
- DT BYPASS – SETS THE LENGTH OF THE DELAYED TRANSFER (LOAD "OFF" TIME) IF THE PREVIOUS PARAMETER HAS BEEN SELECTED TO OPERATE WITH DELAYED TRANSITION. THE DELAY ("OFF" PERIOD) BEGINS FOLLOWING THE OPENING OF THE SOURCE CONTACTOR, (CN OR CE), CONNECTED TO THE SOURCE FROM WHICH TRANSFER IS BEING MADE. UPON EXPIRATION, CLOSURE OF THE OPPOSITE SOURCE CONTACTOR IN INITIATED.

SIGNALS & AUXILIARIES

A. FEATURES 7 & 8– ENGINE START SIGNAL
SIGNAL INITIATED BY DROPOUT OF CONTROL PANEL RELAY (NR) FOLLOWING EXPIRATION OF THE FEATURE 1C TIME DELAY (DELAY TO OVERRIDE MOMENTARY NORMAL SOURCE OUTAGES). FEATURE 7 CLOSES TO SIGNAL ENGINE START. FEATURE 8 OPENS TO SIGNAL ENGINE START. ENGINE STARTING SIGNAL RESETS FOLLOWING RETRANSFER TO THE NORMAL SOURCE AND EXPIRATION OF THE FEATURE 2E (ENGINE COOL DOWN) TIME DELAY. FEATURES 7 & 8 ARE PROVIDED AS A SINGLE FORM C CONTACT CONNECTED TO THE FIELD CONNECTIONS TERMINAL BLOCK (TB). CONTACT RATED 5 AMPS AT 32 VDC/120VAC RESISTIVE.

B. FEATURES 14AF & 14BF – TRANSFER SWITCH AUXILIARY POSITION INDICATING CONTACTS.
SEVEN (7) FORM C CONTACTS TO INDICATE CONNECTION OF THE TRANSFER SWITCH TO NORMAL (14A) AND SEVEN (7) FOR EMERGENCY (14B). CONTACTS CONNECTED TO THE FIELD CONNECTIONS TERMINAL BLOCK (TB). CONTACTS RATED 10 AMPS, 32 VDC, 250 VAC.

C. FEATURE 17 – REMOTE TRANSFER TO EMERGENCY.
REQUIRES A CUSTOMER SUPPLIED NORMALLY OPEN CONTACT. CLOSING OF THE CONTACT CAUSES ENGINE START AND TRANSFER TO THE EMERGENCY SOURCE. OPENING OF THE CONTACT ACTIVATES THE FEATURE 3A (RETRANSFER TO NORMAL) DELAY PRIOR TO RETRANSFER. IN THE EVENT THE EMERGENCY SOURCE FAILS WHILE THE TRANSFER SWITCH IS CONNECTED TO EMERGENCY AND THE REMOTE CONTACT IS CLOSED, THE TRANSFER SWITCH WILL RETRANSFER TO THE NORMAL SOURCE. CONNECTED TO THE FIELD CONNECTIONS TERMINAL BLOCK (TB).

USER CONTROLS AND INDICATIONS

A. FEATURES 5 & 6B – TRANSFER TEST/RETRANSFER TIME DELAY BYPASS CONTROLS.
TRANSFER TEST:
OPERATION CAUSES A NORMAL SOURCE FAILURE SEQUENCE. ACTIVATE AND HOLD FOR AT LEAST 15 SECONDS TO ALLOW TIME FOR THE ENGINE–GENERATOR TO START.
RETRANSFER TIME DELAY BYPASS:
OPERATION WILL BYPASS THE FEATURE 3A (RETRANSFER TO NORMAL DELAY).

B. FEATURES 9A & 9B – TRANSFER SWITCH POSITION INDICATORS.
FEATURE 9A: TRANSFER SWITCH CLOSED ON NORMAL (GREEN LED)
FEATURE 9B: TRANSFER SWITCH CLOSED ON EMERGENCY (RED LED)

C. FEATURES 9C & 9D – SOURCE ACCEPTANCE INDICATORS.
FEATURE 9C: NORMAL SOURCE ACCEPTED (GREEN LED)
FEATURE 9D: EMERGENCY SOURCE ACCEPTED (RED LED)

D. EXTENDED PARALLEL TIME – INDICATES THAT THE MAIN CONTACTORS (CN & CE) HAVE BEEN SIMULTANEOUSLY CLOSED FOR A PERIOD EXCEEDING THE TIME ALLOTTED. (RED LED)

E. FAILURE TO SYNCHRONIZE – INDICATES THE THE TWO SOURCES DID NOT MEET THE PARAMETERS REQUIRED FOR A CLOSED TRANSITION TRANSFER. (RED LED)

F. TS LOCKED OUT – INDICATES THAT A FAILURE OF THE TRANSFER SWITCH OPERATOR HAS OCCURRED AND THAT THE TRANSFER SWITCH HAS TAKEN CORRECTIVE ACTION AS REQUIRED. ONCE THIS FAILURE RECOVERY OPERATION TAKES PLACE, THE TRANSFER SWITCH IS PREVENTED FROM FURTHER OPERATION UNTIL THE CONDITION IS CORRECTED. ONCE THE CONDITION IS CORRECTED, THE TS LOCKED OUT SWITCH MAY BE DEPRESSED TO RESET THE CONTROL PANEL (RED LED).

G. ALARM RESET SWITCH – RESETS FAILURE TO SYNCHRONIZE AND EXTENDED PARALLEL ALARMS.

H. CLOSED TRANSITION BYPASS SWITCH – BYPASSES CLOSED TRANSITION TRANSFER WHEN OPERATED DURING THE PERIOD WHILE THE TRANSFER SWITCH CONTROL PANEL IS MONITORING FOR AN INPHASE CONDITION. CAUSES OPEN TRANSITION TRANSFER TO THE OPPOSITE SOURCE IF CONDITIONS PERMIT.

GENERAL NOTES

1. SWITCH SHOWN DE–ENERGIZED AND CONNECTED TO THE NORMAL SOURCE.
2. DEVICE SYMBOLS AND DESIGNATIONS ARE IN ACCORDANCE WITH NEMA PUBLICATION ICS 1–1983, PART 1–101A.
3. ALL WIRING IS #16 AWG, TINNED, STRANDED COPPER UNLESS OTHERWISE INDICATED.
4. o ON TERMINAL BLOCKS INDICATES AVAILABLE FIELD CONNECTION POINT.
5. ● ON TERMINAL BLOCKS INDICATES FACTORY CONNECTION POINT.
6. CONTROL AND ACCESSORY WIRING IS ROUTED IN ACCORDANCE WITH ASCO ASSEMBLY PROCEDURE GS451261.
7. AN OPERATOR'S MANUAL IS FURNISHED WITH EACH AUTOMATIC TRANSFER SWITCH. REFER TO THIS PUBLICATION PRIOR TO INSTALLATION AND OPERATION OF THE UNIT.

ACCESSORIES

ACC. 5L TRANSFER TEST/RETRANSFER TIME DELAY BYPASS SELECTOR. THREE POSITION SELECTOR, SPRING RETURN LEFT, MAINTAINED RIGHT.
TEST POSITION (MAINTAINED) SIMULATES A NORMAL SOURCE FAILURE WITH OVERRIDE RETRANSFER TO NORMAL IN THE EVENT OF AN EMERGENCY SOURCE FAILURE. RETRANSFER TIME DELAY BYPASS POSITION (MOMENTARY) BYPASSES THE FEATURE 3A (RETRANSFER TO NORMAL DELAY).
NOTE: REPLACES THE FEAT. 5 & INCLUDES FEAT. 6B.

BASE CATALOG NUMBER				CATALOG NUMBER SUFFIXES			
CATALOG TYPE	NEUTRAL TYPE	PHASE POLES	AMPS	VOLT CODE	CONTROLLER	OPTIONAL ACCESSORY	ENCLOSURE CODE
7ACTS	A B BLANK FOR NONE	3	1000 1200 1600 2000 2600 3000 3200	A B C D E F G H J K L M N P Q R	5	X BLANK FOR NONE	C E F G H J K L M N P Q BLANK FOR OPEN TYPE

EXPLANATION OF CATALOG NUMBER CODES

NEUTRAL TYPE		VOLTAGE CODES 3 PHASE (3 OR 4 WIRE) 50 OR 60 Hz		ENCLOSURE CODES		
CODE	DESCRIPTION	CODE	NOMINAL VOLTAGE	CODE	TYPE	DESCRIPTION
BLANK	NONE	A	115	BLANK		OPEN TYPE (NO ENCLOSURE)
A	SOLID	B	120	C	1	GENERAL PURPOSE, INDOOR
B	SWITCHING	C	208	E	2	INDOOR, WATER & DUST RESISTANT
		D	220	F	3R	OUTDOOR, RAINPROOF, SLEET & ICE RESISTANT
		E	230	G	4	INDOOR/OUTDOOR, WATERTIGHT & DUST TIGHT
		F	240	H	4X	TYPE 4 PLUS CORROSION RESISTANCE (STAINLESS STEEL)
		G	277	J	4X	TYPE 4 PLUS CORROSION RESISTANCE (FIBERGLASS)
		H	380	K	7	EXPLOSION PROOF
		J	400	L	12	INDOOR, INDUSTRIAL ENVIRONMENTS, OIL TIGHT & DUST TIGHT
		K	415			
		L	440			(SECURE ENCLOSURES)
		M	460	M	3R	OUTDOOR, RAINPROOF, SLEET & ICE RESISTANT
		N	480	N	4	INDOOR/OUTDOOR, WATERTIGHT & DUSTTIGHT
		P	550	P	4X	TYPE 4 PLUS CORROSION RESISTANCE (STAINLESS STEEL)
		Q	575	Q	12	INDOOR, INDUSTRIAL ENVIRONMENTS, OILTIGHT & DUSTTIGHT
		R	600			

CATALOG NUMBER _____
ASCO® CERTIFIED TO S.O. _____
BY _____
DATE _____
FORM REV K

REV. TO SHEET	ECN NO.	BY	APP.	DATE
B	226391 SEE ECN	KK	BK	02/24/10
A	156183 SEE ECN	BWM		12/14/00
—	150565 ISSUE	FDG	RR	2/99

PROJECT NAME:
WIRING DIAGRAM
7000 SERIES (G7ACTS) 3PH 1000–3200 AMPS
"G" FRAME, GROUP 5 CONTROLS

THIRD ANGLE PROJECTION

	BY	DATE
DRAWN BY	FDG	2/99
CHECKED	TR	2/99
PROJECT APPROVAL	WK	2/99
FINAL APPROVAL		

MANUFACTURING TOLERANCES TO BE IN ACCORDANCE WITH ASCO PROCEDURE MP-1-003. FOR PLASTIC PARTS SEE MP-1-055
ASSEM. REF. NO.

PROPERTY OF ASCO POWER TECHNOLOGIES. USE PERMITTED FOR OUR WORK ONLY. ALL RIGHTS OF DESIGN OR INVENTION ARE RESERVED.

ASCO® ASCO POWER TECHNOLOGIES, L.P. FLORHAM PARK, NEW JERSEY 07932 U.S.A.

COMPUTER GENERATED DRAWING
SCALE SIZE DS
DWG. NO. 617413–005
DRAWING REV. B ECN NO. 226391 SHEET 1 OF 6

FIELD CONNECTIONS

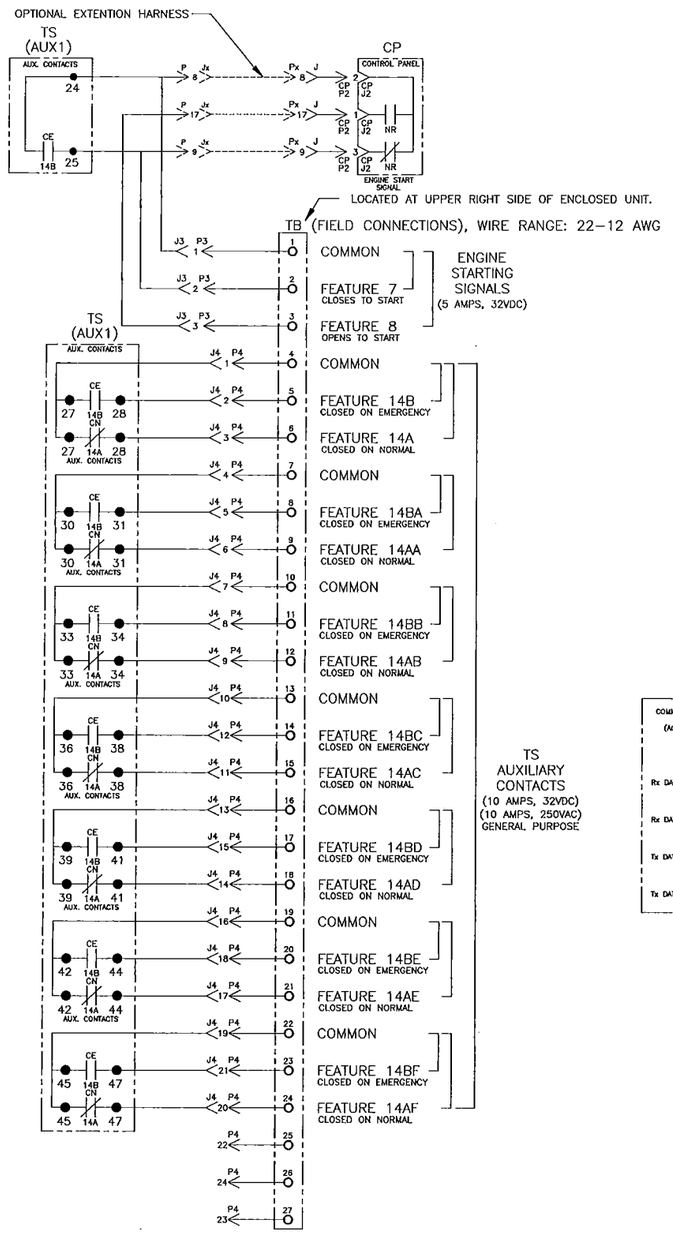

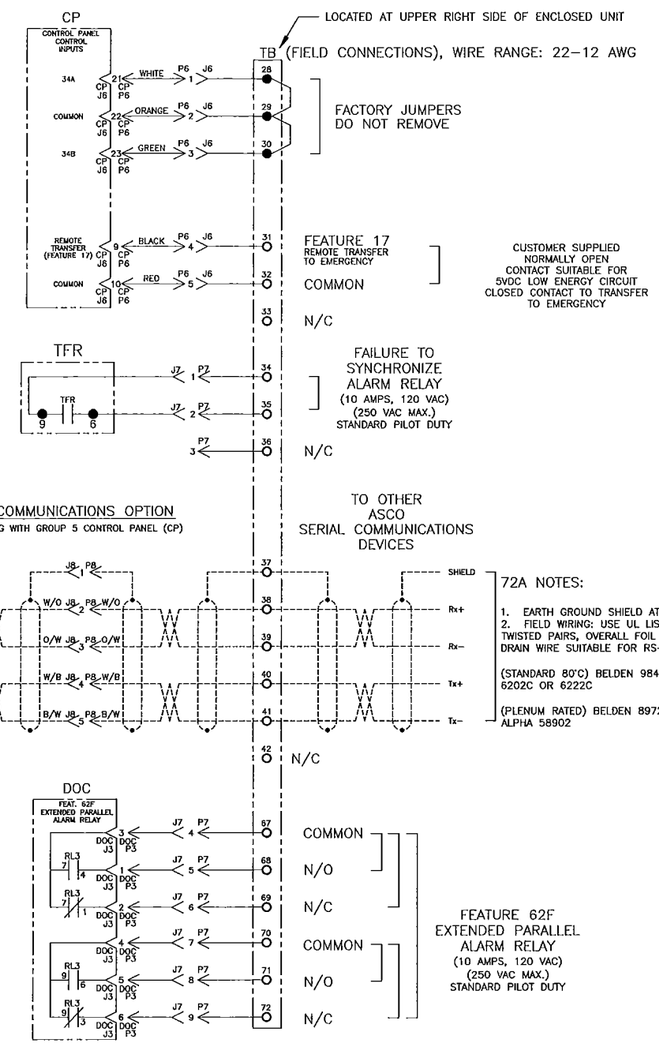

72A NOTES:

1. EARTH GROUND SHIELD AT HOST DEVICE ONLY.
2. FIELD WIRING: USE UL LISTED, STRANDED, TWISTED PAIRS, OVERALL FOIL SHIELD WITH STRANDED DRAIN WIRE SUITABLE FOR RS-422 EQUIVALENT TO:

(STANDARD 80°C) BELDEN 9842 OR 9829 OR ALPHA 6202C OR 6222C

(PLENUM RATED) BELDEN 89729 OR 82729 OR ALPHA 58902

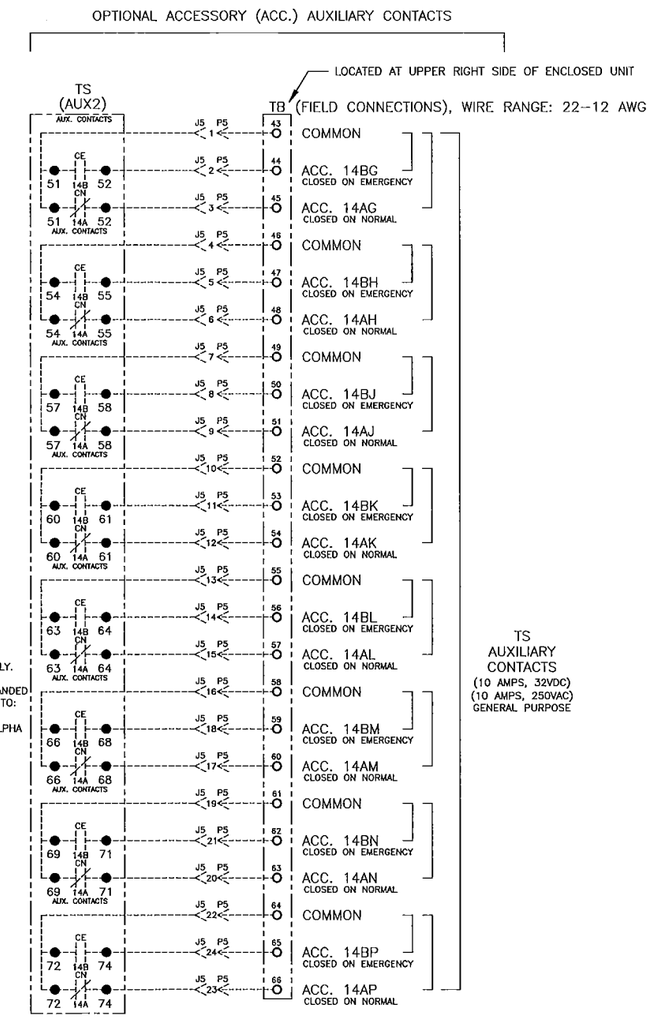

B	226391	KK	BK	02/24/10
	SEE ECN			
A	156183	BWM		12/14/00
	SEE ECN			
—	150565	FDG	RR	2/99
	ISSUE			
REV. TO SHEET	ECN NO.	BY	APP.	DATE

PROJECT NAME:

WIRING | DIAGRAM

7000 SERIES (G7ACTS) 3PH 1000-3200 AMPS
"G" FRAME, GROUP 5 CONTROLS

THIRD ANGLE PROJECTION

	BY	DATE
DRAWN BY	FDG	2/99
CHECKED	TR	2/99
PROJECT APPROVAL	WK	2/99
FINAL APPROVAL		

MANUFACTURING TOLERANCES TO BE IN ACCORDANCE WITH ASCO PROCEDURE MP-1-003. FOR PLASTIC PARTS SEE MP-1-055

ASSEM. REF. NO.

PROPERTY OF ASCO POWER TECHNOLOGIES. USE PERMITTED FOR OUR WORK ONLY. ALL RIGHTS OF DESIGN OR INVENTION ARE RESERVED.

ASCO® ASCO POWER TECHNOLOGIES, L.P. FLORHAM PARK, NEW JERSEY 07932 U.S.A.

COMPUTER GENERATED DRAWING

SCALE | SIZE DS

DWG. NO. 617413-005

DRAWING REV. B | ECN NO. 226391 | SHEET 2 OF 6

MAIN POWER POLES

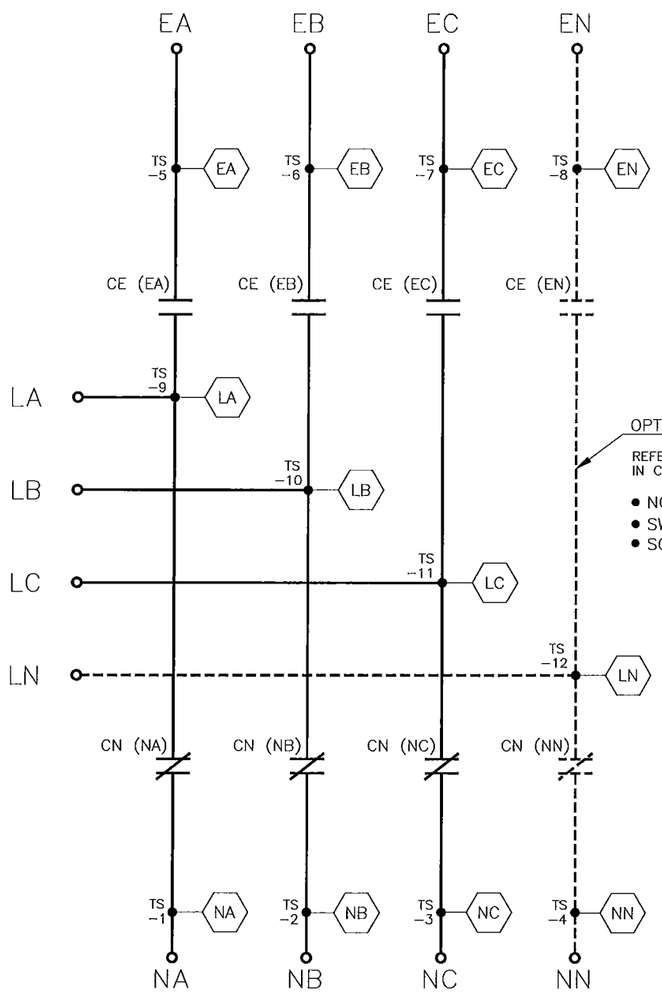

OPTIONAL NEUTRAL TYPES

REFER TO "EXPLANATION OF CATALOG NUMBER CODES" IN CATALOG NUMBER CHART ON SHEET 1.

- NONE
- SWITCHING
- SOLID BUS PLATE

NOTE:
ATS SHOWN CLOSED ON NORMAL SOURCE.

TS OPERATOR CIRCUIT

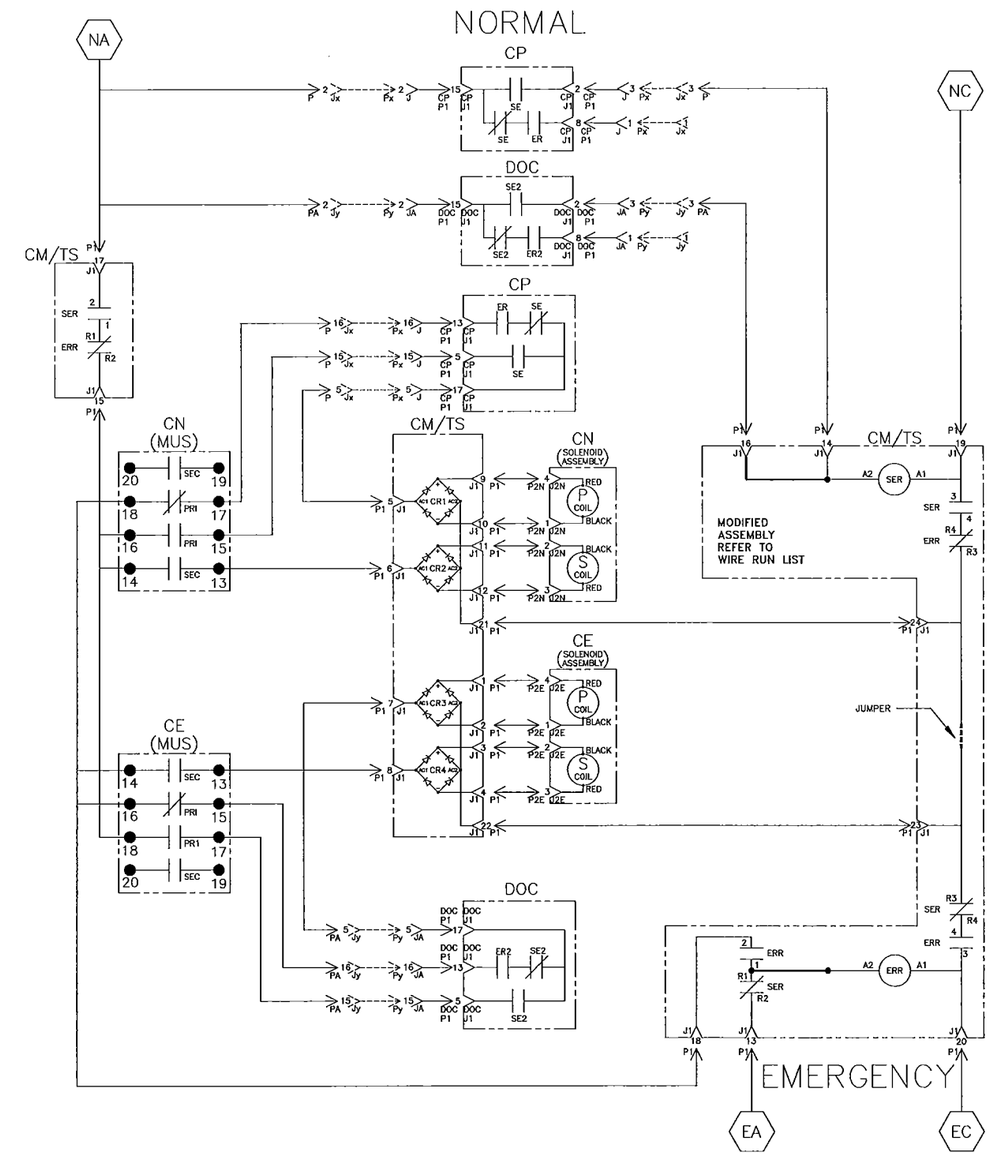

CN (MUS) CONTACTS					
MUS	SOLENOID POSITION				
	NORM	>	AFTER TDC *	<	OPEN
13–14		X	X		
15–16				X	X
17–18	X	X			
19–20			X	X	

CE (MUS) CONTACTS					
MUS	SOLENOID POSITION				
	OPEN	>	AFTER TDC *	<	EMER
13–14	X	X	X	X	
15–16	X	X			X
17–18					
19–20		X	X		

* AFTER SOLENOID CORE PASSES THROUGH TOP DEAD CENTER POSITION.

REV. TO SHEET	ECN NO.	BY	APP.	DATE
B	226391 SEE ECN	KK	BK	02/24/10
A	156183 SEE ECN	BWM		12/14/00
—	150565 ISSUE	FDG	RR	2/99

PROJECT NAME:

WIRING DIAGRAM

7000 SERIES (G7ACTS) 3PH 1000–3200 AMPS
"G" FRAME, GROUP 5 CONTROLS

THIRD ANGLE PROJECTION

	BY	DATE
DRAWN BY	FDG	2/99
CHECKED	TR	2/99
PROJECT APPROVAL	WK	2/99
FINAL APPROVAL		

MANUFACTURING TOLERANCES TO BE IN ACCORDANCE WITH ASCO PROCEDURE MP-1-003. FOR PLASTIC PARTS SEE MP-1-055

ASSEM. REF. NO.

PROPERTY OF ASCO POWER TECHNOLOGIES. USE PERMITTED FOR OUR WORK ONLY. ALL RIGHTS OF DESIGN OR INVENTION ARE RESERVED.

ASCO® ASCO POWER TECHNOLOGIES, L.P. FLORHAM PARK, NEW JERSEY 07932 U.S.A.

COMPUTER GENERATED DRAWING

SCALE | SIZE DS

DWG. NO. 617413–005

DRAWING REV. B | ECN NO. 226391 | SHEET 3 OF 6

NORMAL SOURCE CIRCUITS

NORMAL

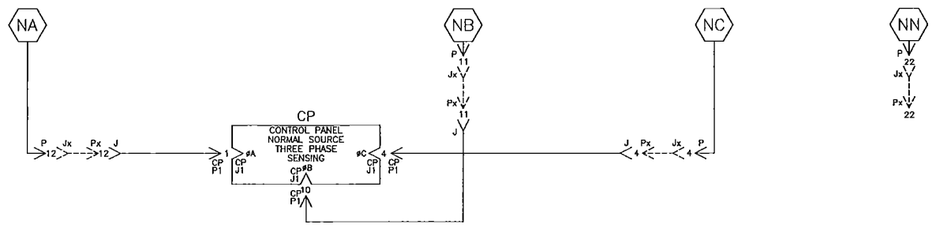

EMERGENCY SOURCE CIRCUITS

EMERGENCY

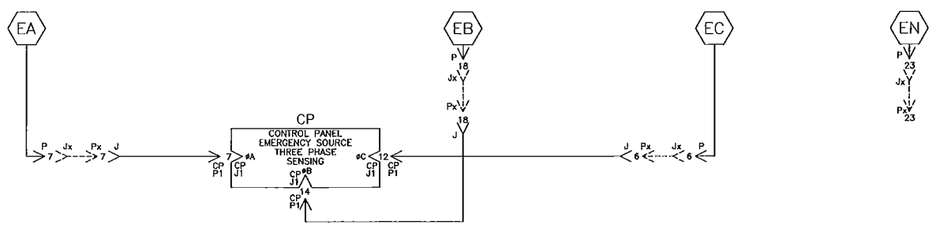

LOAD TERMINAL CIRCUITS

LOAD

CONTROL SIGNALS & INDICATION

SER2/ER2 CONTROL

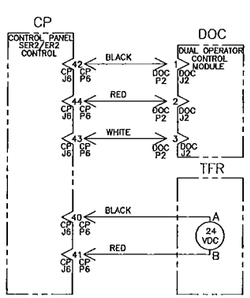

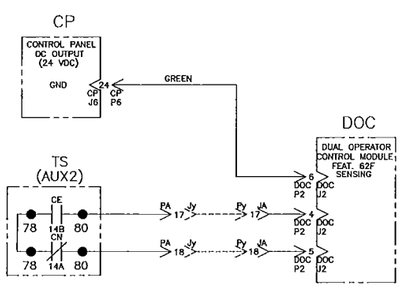

TS POSITION SENSING

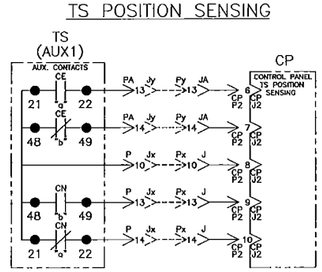

CONTROL SIGNALS & INDICATION

USER CONTROLS

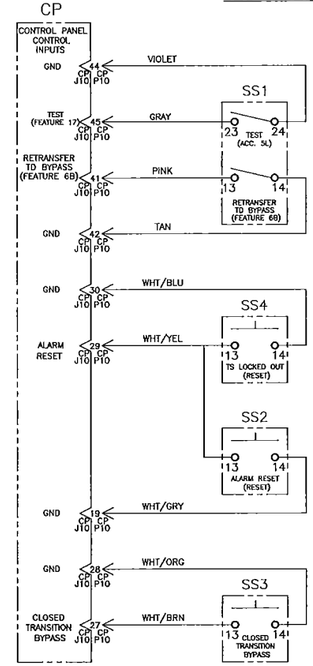

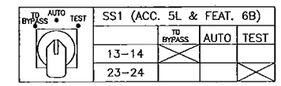

INDICATION

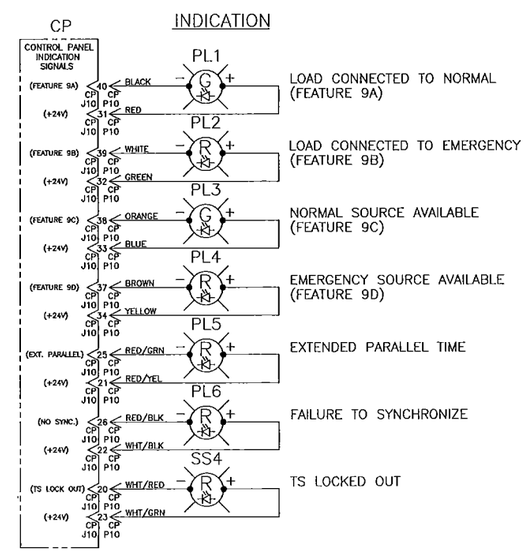

REV. TO SHEET	ECN NO.	BY	APP.	DATE
B	226391	KK	BK	02/24/10
	SEE ECN			
A	156183	BWM		12/14/00
	SEE ECN			
—	150565	FDG	RR	2/99
	ISSUE			

PROJECT NAME:

WIRING DIAGRAM

7000 SERIES (G7ACTS) 3PH 1000-3200 AMPS
"G" FRAME, GROUP 5 CONTROLS

THIRD ANGLE PROJECTION

	BY	DATE
DRAWN BY	FDG	2/99
CHECKED	TR	2/99
PROJECT APPROVAL	WK	2/99
FINAL APPROVAL		

MANUFACTURING TOLERANCES TO BE IN ACCORDANCE WITH ASCO PROCEDURE MP-1-003. FOR PLASTIC PARTS SEE MP-1-055

ASSEM. REF. NO.

PROPERTY OF ASCO POWER TECHNOLOGIES. USE PERMITTED FOR OUR WORK ONLY. ALL RIGHTS OF DESIGN OR INVENTION ARE RESERVED.

ASCO® ASCO POWER TECHNOLOGIES, L.P. FLORHAM PARK, NEW JERSEY 07932 U.S.A.

COMPUTER GENERATED DRAWING

SCALE | SIZE DS

DWG. NO. 617413-005

DRAWING REV. B | ECN NO. 226391 | SHEET 4 OF 6

PHYSICAL DIAGRAM

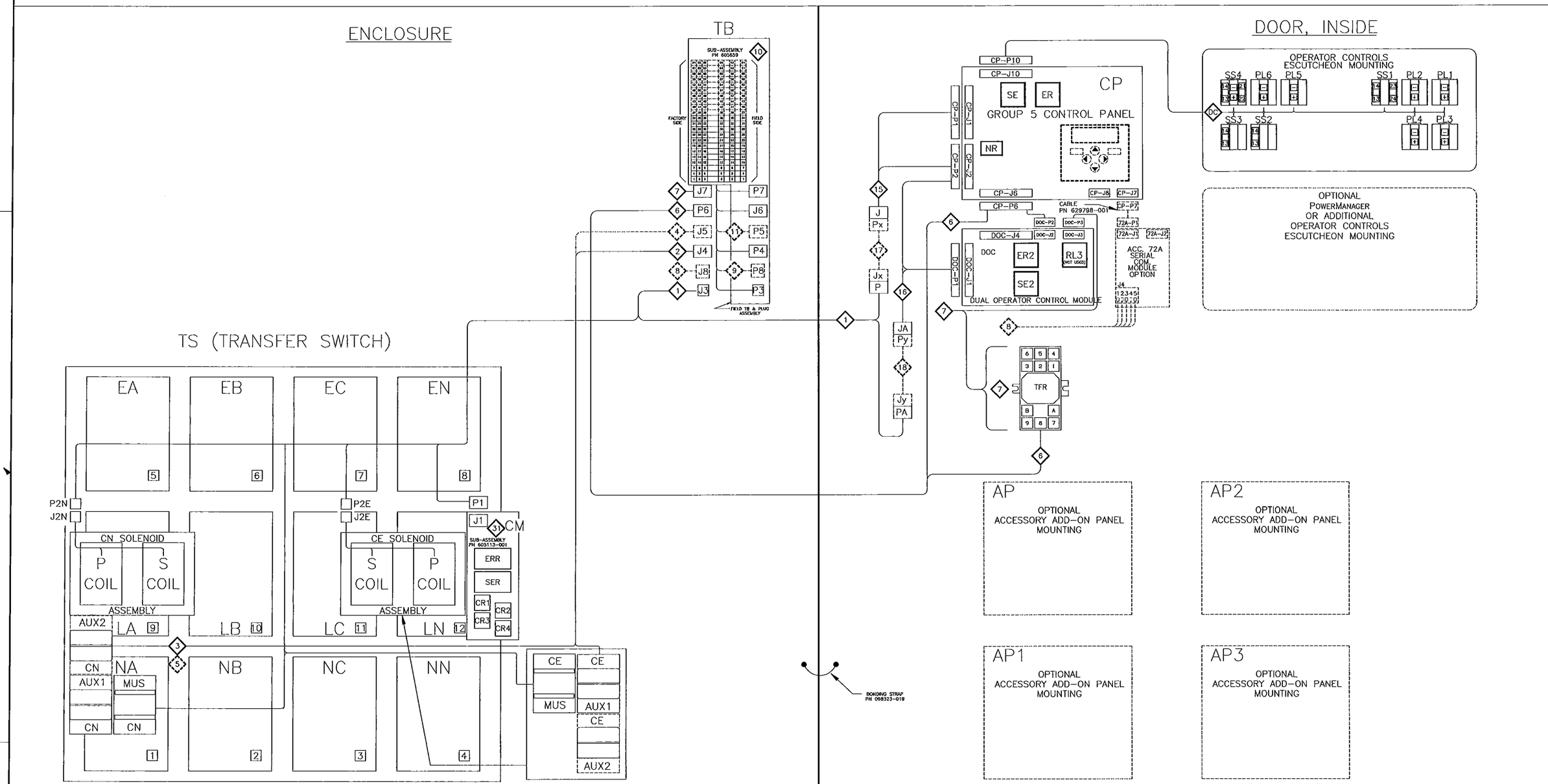

OPERATOR CONTROLS

ID	DESCRIPTION
PL1	TS CONNECTED TO NORMAL (GREEN)
PL2	TS CONNECTED TO EMERGENCY (RED)
PL3	NORMAL SOURCE ACCEPTED (GREEN)
PL4	EMERGENCY SOURCE ACCEPTED (RED)
PL5	EXTENDED PARALLEL TIME (RED)
PL6	FAILURE TO SYNCHRONIZE (RED)
SS1	TEST-RETRANSFER DELAY BYPASS
SS2	ALARM RESET
SS3	CLOSED TRANSITION BYPASS
SS4	TS LOCKED OUT (RED)

REV. TO SHEET	ECN NO.	BY	APP.	DATE
B	226391 SEE ECN	KK	BK	02/24/10
A	156183 SEE ECN	BWM		12/14/00
—	150565 ISSUE	FDG	RR	2/99

PROJECT NAME:

WIRING DIAGRAM

7000 SERIES (G7ACTS) 3PH 1000-3200 AMPS
"G" FRAME, GROUP 5 CONTROLS

THIRD ANGLE PROJECTION

	BY	DATE
DRAWN BY	FDG	2/99
CHECKED	TR	2/99
PROJECT APPROVAL	WK	2/99
FINAL APPROVAL		

MANUFACTURING TOLERANCES TO BE IN ACCORDANCE WITH ASCO PROCEDURE MP-I-003. FOR PLASTIC PARTS SEE MP-I-055

ASSEM. REF. NO.

PROPERTY OF ASCO POWER TECHNOLOGIES. USE PERMITTED FOR OUR WORK ONLY. ALL RIGHTS OF DESIGN OR INVENTION ARE RESERVED.

ASCO® ASCO POWER TECHNOLOGIES, L.P. FLORHAM PARK, NEW JERSEY 07932 U.S.A.

COMPUTER GENERATED DRAWING

SCALE DS

DWG. NO. 617413-005

DRAWING REV. B ECN NO. 226391 SHEET 5 OF 6

WIRE RUN LISTING

1 — HARNESS LOCATOR (BOX CHECKED IF HARNESS IS MODIFIED ☐)

WIRE No.	HARNESS 619510-026 (P,P1,P2N,P2E,J3,) MAIN TS	CLR	AWG
1	P--2,TS--1		16
1	P1--17,TS--1		
1	PA--2,TS--1		
2	P--3,P1--14		
3	P--4,TS--3		
3	P1--19,TS--3		
22	P--5,P1--5		
5	P--6,TS--7		
5	P1--20,TS--7		
4	P--7,TS--5		
4	P1--13,TS--5		
6	P--8,CE(AUX1)--24		
6	CE(AUX1)--24,J3--1		
7	P--9,CE(AUX1)--25		
7	CE(AUX1)--25,J3--2		
8	P--10,CE(AUX1)--21		
8	CE(AUX1)--21,CN(AUX1)--21		
8	CN(AUX1)--21,CN(AUX1)--48		
9	P--11,TS--2		
10	P--12,TS--1		
11	P--13,CN(AUX1)--49		
12	P--14,CN(AUX1)--22		
200	P--15,CN(MUS)--15		
13	P--16,CN(MUS)--17		
14	P--17,J3--3		
15	P--18,TS--6		
16	P--19,TS--9		
17	P--20,TS--10		
18	P--21,TS--11		
19	P--22,TS--4		
20	P--23,TS--8		
21	P--24,TS--12		
31	P1--1,P2E--4		
32	P1--2,P2E--1		
33	P1--3,P2E--2		
34	P1--4,P2E--3		
23	P1--6,CN(MUS)--13		
39	P1--8,CE(MUS)--13		
24	P1--9,P2N--4		
25	P1--10,P2N--1		
26	P1--11,P2N--2		
27	P1--12,P2N--3		
29	P1--15,CE(MUS)--18		
29	CE(MUS)--18,CN(MUS)--14		
29	CN(MUS)--14,CN(MUS)--16		
28	P1--18,CE(MUS)--16		
28	CE(MUS)--16,CE(MUS)--14		
28	CE(MUS)14,CN(MUS)--18		
30	P1--21,P1--24		
35	P1--22,P1--23		
202	PA--3,P1--16		
38	PA--5,P1--7		
211	PA--13,CE(AUX1)--22		
212	PA--14,CE(AUX1)--49		
213	PA--15,CE(MUS)--17		
214	PA--16,CE(MUS)--15		
215	PA--17,CE(AUX2)--80		
216	PA--18,CN(AUX2)--80		
223	CE(AUX2)--78,CN(AUX2)--78		
	REMOVE WIRES		
	ADD WIRES		
199	J3--4		
300	P--1		
201	PA--1		
203	PA--4		
204	PA--6		
205	PA--7		
206	PA--8		
207	PA--9		
208	PA--10		
209	PA--11		
210	PA--12		
217	PA--19		
218	PA--20		
219	PA--21		
220	PA--22		
221	PA--23		
222	PA--24		

2 — HARNESS LOCATOR (BOX CHECKED IF HARNESS IS MODIFIED ☒)

WIRE No.	HARNESS 609051-001 (J4) TS STD. AUX. CONTACTS	CLR	AWG
40	J4--1,CE(AUX1)--27		16
41	J4--2,CE(AUX1)--28		
42	J4--3,CN(AUX1)--28		
43	J4--4,CE(AUX1)--30		
44	J4--5,CE(AUX1)--31		
45	J4--6,CN(AUX1)--31		
46	J4--7,CE(AUX1)--33		
47	J4--8,CE(AUX1)--34		
48	J4--9,CN(AUX1)--34		
49	J4--10,CE(AUX1)--36		
50	J4--11,CN(AUX1)--38		
51	J4--12,CE(AUX1)--38		
52	J4--13,CE(AUX1)--39		
53	J4--14,CN(AUX1)--41		
54	J4--15,CE(AUX1)--41		
55	J4--16,CE(AUX1)--42		
56	J4--17,CN(AUX1)--44		
57	J4--18,CE(AUX1)--44		
58	J4--19,CE(AUX1)--45		
59	J4--20,CN(AUX1)--47		
60	J4--21,CE(AUX1)--47		
61	J4--22,CE(AUX1)--48		
62	J4--23,CN(AUX1)--50		
63	J4--24,CE(AUX1)--50		
	REMOVE WIRES		
61	J4--22,CE(AUX1)--48		
62	J4--23,CN(AUX1)--50		
63	J4--24,CE(AUX1)--50		

3 — HARNESS LOCATOR (BOX CHECKED IF HARNESS IS MODIFIED ☐)

WIRE No.	HARNESS 609051-001-A TS STD. AUX. CONTACTS	CLR	AWG
40	CE(AUX1)--27,CN(AUX1)--27		16
43	CE(AUX1)--30,CN(AUX1)--30		
46	CE(AUX1)--33,CN(AUX1)--33		
49	CE(AUX1)--36,CN(AUX1)--36		
52	CE(AUX1)--39,CN(AUX1)--39		
55	CE(AUX1)--42,CN(AUX1)--42		
58	CE(AUX1)--45,CN(AUX1)--45		
8	CE(AUX1)--48,CN(AUX1)--48		

4 — HARNESS LOCATOR (BOX CHECKED IF HARNESS IS MODIFIED ☐)

WIRE No.	HARNESS 609051--002 (J5) TS OPT. AUX. CONTACTS	CLR	AWG
70	J5--1,CE(AUX2)--51		16
71	J5--2,CE(AUX2)--52		
72	J5--3,CN(AUX2)--52		
73	J5--4,CE(AUX2)--54		
74	J5--5,CE(AUX2)--55		
75	J5--6,CN(AUX2)--55		
76	J5--7,CE(AUX2)--57		
77	J5--8,CE(AUX2)--58		
78	J5--9,CN(AUX2)--58		
79	J5--10,CE(AUX2)--60		
80	J5--11,CE(AUX2)--61		
81	J5--12,CN(AUX2)--61		
82	J5--13,CE(AUX2)--63		
83	J5--14,CE(AUX2)--64		
84	J5--15,CN(AUX2)--64		
85	J5--16,CE(AUX2)--66		
86	J5--17,CN(AUX2)--68		
87	J5--18,CE(AUX2)--68		
88	J5--19,CE(AUX2)--69		
89	J5--20,CN(AUX2)--71		
90	J5--21,CE(AUX2)--71		
91	J5--22,CE(AUX2)--72		
92	J5--23,CN(AUX2)--74		
93	J5--24,CE(AUX2)--74		

5 — HARNESS LOCATOR (BOX CHECKED IF HARNESS IS MODIFIED ☐)

WIRE No.	HARNESS 609051-002-A TS OPT. AUX. CONTACTS	CLR	AWG
70	CE(AUX2)--51,CN(AUX2)--51		16
73	CE(AUX2)--54,CN(AUX2)--54		
76	CE(AUX2)--57,CN(AUX2)--57		
79	CE(AUX2)--60,CN(AUX2)--60		
82	CE(AUX2)--63,CN(AUX2)--63		
85	CE(AUX2)--66,CN(AUX2)--66		
88	CE(AUX2)--69,CN(AUX2)--69		
91	CE(AUX2)--72,CN(AUX2)--72		

6 — HARNESS LOCATOR (BOX CHECKED IF HARNESS IS MODIFIED ☒)

WIRE No.	HARNESS 619510-005 (P6) FIELD INPUTS	CLR	AWG
100	CP--P6--21,P6--1	WHT	
101	CP--P6--22,P6--2	ORG	22
102	CP--P6--23,P6--3	GRN	(12 COND)
103	CP--P6--9,P6--4	BLK	
104	CP--P6--10,P6--5	RED	
	ADD WIRES		
305	CP--P6--40,TFR--A	BLK	22
306	CP--P6--41,TFR--B	RED	(2 COND)
307	CP--P6--42,DOC--P2--1	BLK	
308	CP--P6--43,DOC--P2--3	WHT	22
309	CP--P6--44,DOC--P2--2	RED	(4 COND)
310	CP--P6--24,DOC--P2--6	GRN	
			16
105	P6--6		
106	P6--7		
107	P6--8		
108	P6--9		
109	P6--10		
110	P6--11		
111	P6--12		
112	P6--13		
113	P6--14		
114	P6--15		
115	P6--16		
116	P6--17		
117	P6--18		
118	P6--19		
119	P6--20		
120	P6--21		
121	P6--22		
122	P6--23		
123	P6--24		

7 — HARNESS LOCATOR (BOX CHECKED IF HARNESS IS MODIFIED ☒)

WIRE No.	HARNESS (J7) FIELD OUTPUTS	CLR	AWG
130	J7--1,TFR--9		16
131	J7--2,TFR--6		
132	J7--3		
133	J7--4,DOC--P3--3		
134	J7--5,DOC--P3--1		
135	J7--6,DOC--P3--2		
136	J7--7,DOC--P3--4		
137	J7--8,DOC--P3--5		
138	J7--9,DOC--P3--6		
139	J7--10		
140	J7--11		
141	J7--12		
142	J7--13		
143	J7--14		
144	J7--15		
145	J7--16		
146	J7--17		
147	J7--18		
148	J7--19		
149	J7--20		
150	J7--21		
151	J7--22		
152	J7--23		
153	J7--24		

8 — HARNESS LOCATOR (BOX CHECKED IF HARNESS IS MODIFIED ☐)

WIRE No.	HARNESS 605454--005 (J8) OPTIONAL SERIAL I/O	CLR	AWG
160	J8--1,72A--5	SHLD	
161	J8--2,72A--1	WHT/ORG	22
162	J8--3,72A--2	ORG/WHT	(4 COND)
163	J8--4,72A--3	WHT/BLU	
164	J8--5,72A--4	BLU/WHT	
165	J8--6		
166	J8--7		
167	J8--8		
168	J8--9		

9 — HARNESS LOCATOR (BOX CHECKED IF HARNESS IS MODIFIED ☐)

WIRE No.	HARNESS 605454--007 (P8,TB) OPTIONAL SERIAL I/O	CLR	AWG
160	P8--1,TB--37	SHLD	
161	P8--2,TB--38	WHT/ORG	22
162	P8--3,TB--39	ORG/WHT	(4 COND)
163	P8--4,TB--40	WHT/BLU	
164	P8--5,TB--41	BLU/WHT	
165	P8--6		
166	P8--7		
167	P8--8		
168	P8--9		

10 — HARNESS LOCATOR (BOX CHECKED IF HARNESS IS MODIFIED ☒)

WIRE No.	SUB-ASSEMBLY 605659 (P3,P4,J6,P7,TB) STD. FIELD TB	CLR	AWG
6	TB--1,P3--1		16
7	TB--2,P3--2		
14	TB--3,P3--3		
40	TB--4,P4--1		
41	TB--5,P4--2		
42	TB--6,P4--3		
43	TB--7,P4--4		
44	TB--8,P4--5		
45	TB--9,P4--6		
46	TB--10,P4--7		
47	TB--11,P4--8		
48	TB--12,P4--9		
49	TB--13,P4--10		
51	TB--14,P4--12		
50	TB--15,P4--11		
52	TB--16,P4--13		
54	TB--17,P4--15		
53	TB--18,P4--14		
55	TB--19,P4--16		
57	TB--20,P4--18		
56	TB--21,P4--17		
58	TB--22,P4--19		
60	TB--23,P4--21		
59	TB--24,P4--20		
61	TB--25,P4--22		
62	TB--26,P4--24		
63	TB--27,P4--23		
100	TB--28,J6--1		
101	TB--29,J6--2		
102	TB--30,J6--3		
103	TB--31,J6--4		
104	TB--32,J6--5		
130	TB--34,P7--1		
131	TB--35,P7--2		
132	TB--36,P7--3		
	JUMPERS		
	TB--28,TB--29		
	TB--29,TB--30		
	ADD WIRES		
199	P3--4		
105	J6--6		
106	J6--7		
107	J6--8		
108	J6--9		
109	J6--10		
110	J6--11		
111	J6--12		
112	J6--13		
113	J6--14		
114	J6--15		
115	J6--16		
116	J6--17		
117	J6--18		
118	J6--19		
119	J6--20		
120	J6--21		
121	J6--22		
122	J6--23		
123	J6--24		
133	P7--4,TB--67		
134	P7--5,TB--68		
135	P7--6,TB--69		
136	P7--7,TB--70		
137	P7--8,TB--71		
138	P7--9,TB--72		
139	P7--10		
140	P7--11		
141	P7--12		
142	P7--13		
143	P7--14		
144	P7--15		
145	P7--16		
146	P7--17		
147	P7--18		
148	P7--19		
149	P7--20		
150	P7--21		
151	P7--22		
152	P7--23		
153	P7--24		

11 — HARNESS LOCATOR (BOX CHECKED IF HARNESS IS MODIFIED ☐)

WIRE No.	HARNESS 605454--008 (P5,TB) OPT. AUX. CONTACTS	CLR	AWG
70	TB--43,P5--1		16
71	TB--44,P5--2		
72	TB--45,P5--3		
73	TB--46,P5--4		
74	TB--47,P5--5		
75	TB--48,P5--6		
76	TB--49,P5--7		
77	TB--50,P5--8		
78	TB--51,P5--9		
79	TB--52,P5--10		
80	TB--53,P5--11		
81	TB--54,P5--12		
82	TB--55,P5--13		
83	TB--56,P5--14		
84	TB--57,P5--15		
85	TB--58,P5--16		
86	TB--59,P5--18		
87	TB--60,P5--17		
88	TB--61,P5--19		
89	TB--62,P5--21		
90	TB--63,P5--20		
91	TB--64,P5--22		
92	TB--65,P5--24		
93	TB--66,P5--23		

10C — HARNESS LOCATOR (BOX CHECKED IF HARNESS IS MODIFIED ☒)

WIRE No.	HARNESS 713083-003 (CP-P10) DOOR CONTROLS & INDICATORS	CLR	AWG
170	CP--P10--40,PL1(--)	BLK	
171	CP--P10--31,PL1(+)	RED	
172	CP--P10--39,PL2(--)	WHT	
173	CP--P10--32,PL2(+)	GRN	
174	CP--P10--38,PL3(--)	ORG	
175	CP--P10--33,PL3(+)	BLU	22
176	CP--P10--37,PL4(--)	BRN	(25 COND)
177	CP--P10--34,PL4(+)	YEL	
178	CP--P10--25,PL5(--)	RED/GRN	
179	CP--P10--21,PL5(+)	RED/YEL	
180	CP--P10--26,PL6(--)	RED/BLK	
181	CP--P10--22,PL6(+)	WHT/BLK	
182	CP--P10--20,SS4(--)	WHT/RED	
183	CP--P10--23,SS4(+)	WHT/GRN	
184	CP--P10--44,SS1--24	VIO	
185	CP--P10--43,SS1--23	GRY	
186	CP--P10--41,SS1--13	PINK	
187	CP--P10--42,SS1--14	TAN	
188	CP--P10--30,SS4--14	WHT/BLU	
189	SS4--13,SS2--13	WHT/YEL	
189	CP--P10--29,SS4--13	WHT/YEL	
190	CP--P10--19,SS2--14	WHT/GRY	
191	CP--P10--28,SS3--14	WHT/ORG	
192	CP--P10--27,SS3--13	WHT/BRN	
	REMOVE WIRES		
185	CP--P10--43,SS1--23	GRY	
	ADD WIRES		
185	CP--P10--45,SS1--23	GRY	

15 — HARNESS LOCATOR (BOX CHECKED IF HARNESS IS MODIFIED ☐)

WIRE No.	HARNESS 483763 (J,CP--P1,CP--P2) CONTROL PANEL	CLR	AWG
350	J--1,CP--P1--8		18
1	J--2,CP--P1--15		
2	J--3,CP--P1--2		
3	J--4,CP--P1--4		
4	J--5,CP--P1--17		
5	J--6,CP--P1--12		
4	J--7,CP--P1--7		
6	J--8,CP--P2--2		
7	J--9,CP--P2--3		
8	J--10,CP--P2--8		
9	J--11,CP--P1--10		
10	J--12,CP--P1--1		
11	J--13,CP--P2--9		
12	J--14,CP--P2--10		
200	J--15,CP--P1--5		
13	J--16,CP--P1--13		
14	J--17,CP--P2--11		
15	J--18,CP--P1--14		
	ADD WIRES		
16	J--19		
17	J--20		
18	J--21		
19	J--22		
20	J--23		
21	J--24		

16 — HARNESS LOCATOR (BOX CHECKED IF HARNESS IS MODIFIED ☒)

WIRE No.	HARNESS 619385 (JA,CP--P2,CP--P6) CONTROL MODULE	CLR	AWG
1	JA--2,DOC--P1--15		16
202	JA--3,DOC--P1--2		
201	JA--1,DOC--P1--8		
214	JA--16,DOC--P1--13		
213	JA--15,DOC--P1--5		
38	JA--5,DOC--P1--17		
211	JA--13,CP--P2--6	PIN	
212	JA--14,CP--P2--7	PIN	
	ADD WIRES		
203	JA--4		
204	JA--6		
205	JA--7		
206	JA--8		
207	JA--9		
208	JA--10		
209	JA--11		
210	JA--12		
215	JA--17,DOC--P2--4		
216	JA--18,DOC--P2--5		
217	JA--19		
218	JA--20		
219	JA--21		
220	JA--22		
221	JA--23		
222	JA--24		

17 — HARNESS LOCATOR (BOX CHECKED IF HARNESS IS MODIFIED ☐)

WIRE No.	HARNESS 309320-005 OPTIONAL 8 IN. EXTENSION HARNESS	CLR	AWG
350	Jx--1,Px--1		16
1	Jx--2,Px--2		
2	Jx--3,Px--3		
3	Jx--4,Px--4		
4	Jx--5,Px--5		
5	Jx--6,Px--6		
4	Jx--7,Px--7		
6	Jx--8,Px--8		
7	Jx--9,Px--9		
8	Jx--10,Px--10		
9	Jx--11,Px--11		
10	Jx--12,Px--12		
11	Jx--13,Px--13		
12	Jx--14,Px--14		
200	Jx--15,Px--15		
13	Jx--16,Px--16		
14	Jx--17,Px--17		
15	Jx--18,Px--18		
16	Jx--19,Px--19		
17	Jx--20,Px--20		
18	Jx--21,Px--21		
19	Jx--22,Px--22		
20	Jx--23,Px--23		
21	Jx--24,Px--24		

18 — HARNESS LOCATOR (BOX CHECKED IF HARNESS IS MODIFIED ☐)

WIRE No.	HARNESS 309320-005 OPTIONAL 8 IN. EXTENSION HARNESS	CLR	AWG
201	Jy--1,Py--1		16
1	Jy--2,Py--2		
202	Jy--3,Py--3		
203	Jy--4,Py--4		
38	Jy--5,Py--5		
204	Jy--6,Py--6		
205	Jy--7,Py--7		
206	Jy--8,Py--8		
207	Jy--9,Py--9		
208	Jy--10,Py--10		
209	Jy--11,Py--11		
210	Jy--12,Py--12		
211	Jy--13,Py--13		
212	Jy--14,Py--14		
213	Jy--15,Py--15		
214	Jy--16,Py--16		
215	Jy--17,Py--17		
216	Jy--18,Py--18		
217	Jy--19,Py--19		
218	Jy--20,Py--20		
219	Jy--21,Py--21		
220	Jy--22,Py--22		
221	Jy--23,Py--23		
222	Jy--24,Py--24		

WIRE No.	ADDITIONAL WIRING	CLR	AWG
			16

31 — HARNESS LOCATOR (BOX CHECKED IF HARNESS IS MODIFIED ☒)

WIRE No.	SUB-ASSEMBLY 605113-001 (J1,CM) DUAL SOLENOID UNIT CONTROL MODULE ASSEMBLY	CLR	AWG
			16
	J1--1,CR3--(+)		
	J1--2,CR3--(--)		
	J1--3,CR4--(+)		
	J1--4,CR4--(--)		
	J1--5,CR1--AC1		
	J1--6,CR2--AC1		
	J1--7,CR3--AC1		
	J1--8,CR4--AC1		
	J1--9,CR1--(+)		
	J1--10,CR1--(--)		
	J1--11,CR2--(+)		
	J1--12,CR2--(--)		
	J1--13,SER--R2		
	J1--14,SER--A2		
	J1--15,ERR--R2		
	J1--16,ERR--A2		
	J1--17,SER--2		
	J1--18,ERR--2		
	J1--19,SER--A1		
	SER--A1,SER--3		
	J1--20,ERR--A1		
	ERR--A1,ERR--3		
	J1--21,CR1--AC2		
	CR1--AC2,CR2--AC2		
	J1--22,CR3--AC2		
	CR3--AC2,CR4--AC2		
	J1--23,SER--R3		
	J1--24,ERR--R3		
	SER--R3,ERR--R3		
	SER--1,ERR--R1		
	SER--R1,ERR--1		
	SER--4,ERR--R4		
	SER--R4,ERR--4		
	NOTE: SUB-ASSEMBLY NO WIRE NUMBERS NEEDED		
	REMOVE WIRES		
	J1--16,ERR--A2		
	ADD WIRES		
	J1--16,SER--A2		
	ERR--1,ERR--A2		

REV. TO SHEET	ECN NO.	BY	APP.	DATE
B	226391	KK	BK	02/24/10
	SEE ECN			
A	156183	BWM		12/14/00
	SEE ECN			
—	150565	FDG	RR	2/99
	ISSUE			

PROJECT NAME:

WIRING DIAGRAM

7000 SERIES (G7ACTS) 3PH 1000-3200 AMPS
"G" FRAME, GROUP 5 CONTROLS

THIRD ANGLE PROJECTION

	BY	DATE
DRAWN BY	FDG	2/99
CHECKED	TR	2/99
PROJECT APPROVAL	WK	2/99
FINAL APPROVAL		

MANUFACTURING TOLERANCES TO BE IN ACCORDANCE WITH ASCO PROCEDURE MP-1-003. FOR PLASTIC PARTS SEE MP-1-055

ASSEM. REF. NO.

PROPERTY OF ASCO POWER TECHNOLOGIES. USE PERMITTED FOR OUR WORK ONLY. ALL RIGHTS OF DESIGN OR INVENTION ARE RESERVED.

ASCO® ASCO POWER TECHNOLOGIES, L.P. FLORHAM PARK, NEW JERSEY 07932 U.S.A.

COMPUTER GENERATED DRAWING

SCALE | SIZE DS

DWG. NO. 617413-005

DRAWING REV. B | ECN NO. 226391 | SHEET 6 OF 6